REVISION				
REV.	ZONE	DESCRIPTION	DATE	DRAWNBY
A		INITAL RELEASE	7/22/2025	L. BADONG
A1	C5	ADDED DIMENSIONS	9/8/2025	L. BADONG

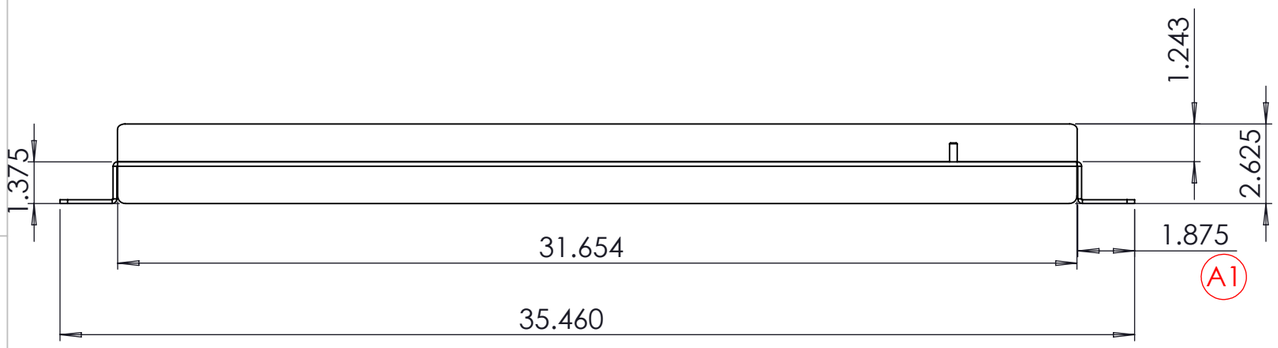

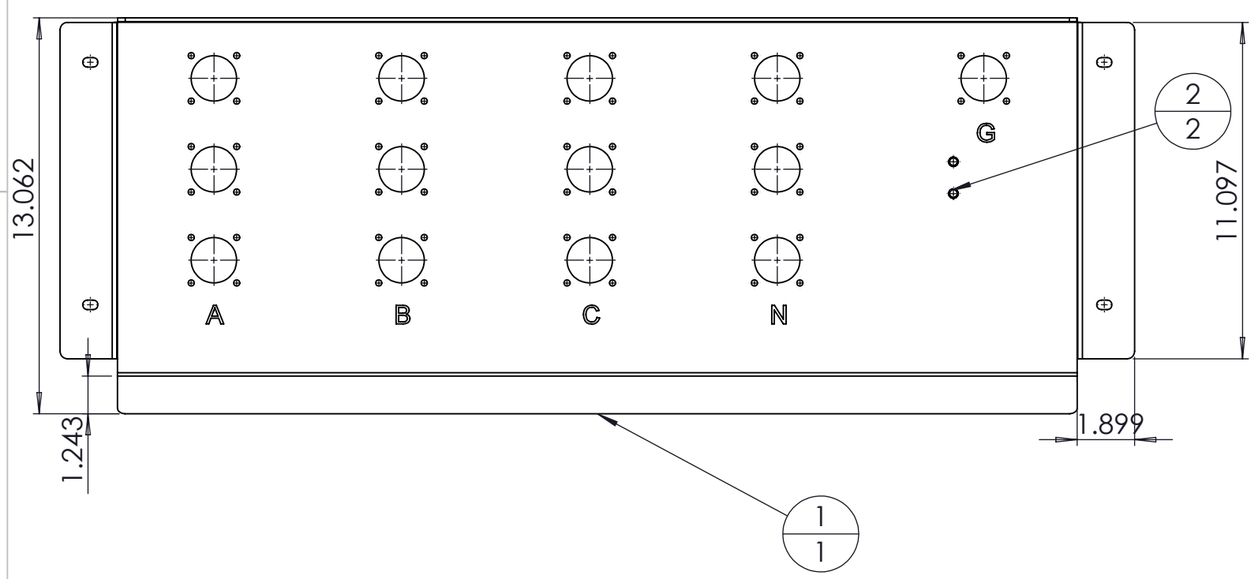

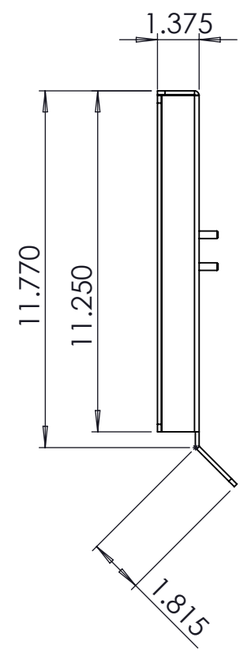

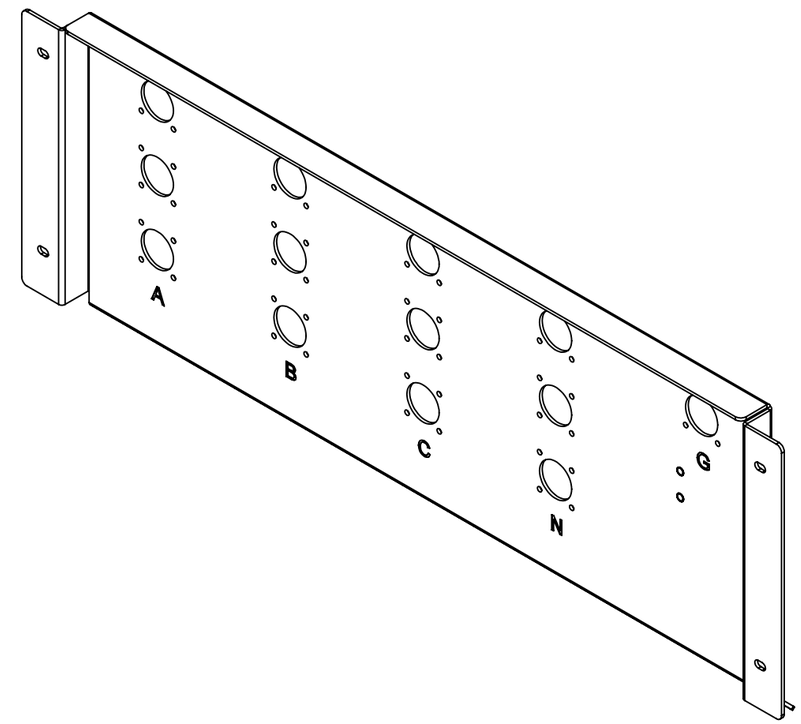

BILL OF MATERIAL

ITEM NO.	PART NUMBER	DESCRIPTION	QTY.
1	200-90002	CAMPLATE, LB, 1200A, 72x36x30 ENCL	1
2	PEM FH-0420-12 ZI		2

MATERIAL 6.17 lbs

FINISH
BARE

PROPRIETARY AND CONFIDENTIAL

THE INFORMATION CONTAINED IN THIS DRAWING IS THE SOLE PROPERTY OF FOXFAB POWER SOLUTIONS ANY REPRODUCTION IN PART OR AS A WHOLE WITHOUT THE WRITTEN PERMISSION OF FOXFAB POWER SOLUTIONS IS PROHIBITED.

DRAWN BY	SAVED ON
LB	9/8/2025

BD	TOP DIE	BOTTOM DIE
-	1mm	16mm

UNLESS OTHERWISE SPECIFIED:
DIMENSIONS ARE IN INCHES
TOLERANCES:
X ± .25
X.X ± .1
X.XX ± .05
X.XXX ± .025
ANGULAR ± 1
INTERPRET DIM AND TOL. PER:
ASME Y14.5

Foxfab Power Solutions
2579-188 ST.
SURREY, BC V3Z 2A1
(604) 460 - 9310
WWW.FOXFAB.COM

TITLE:
CAMPLATE, LB, 1200A, 72x36x30 ENCL

THIRD ANGLE: SIZE **B** SCALE 1:5 REV A1

ITEM NO. DWG. NO. 200-90002 SHEET 1 OF 3

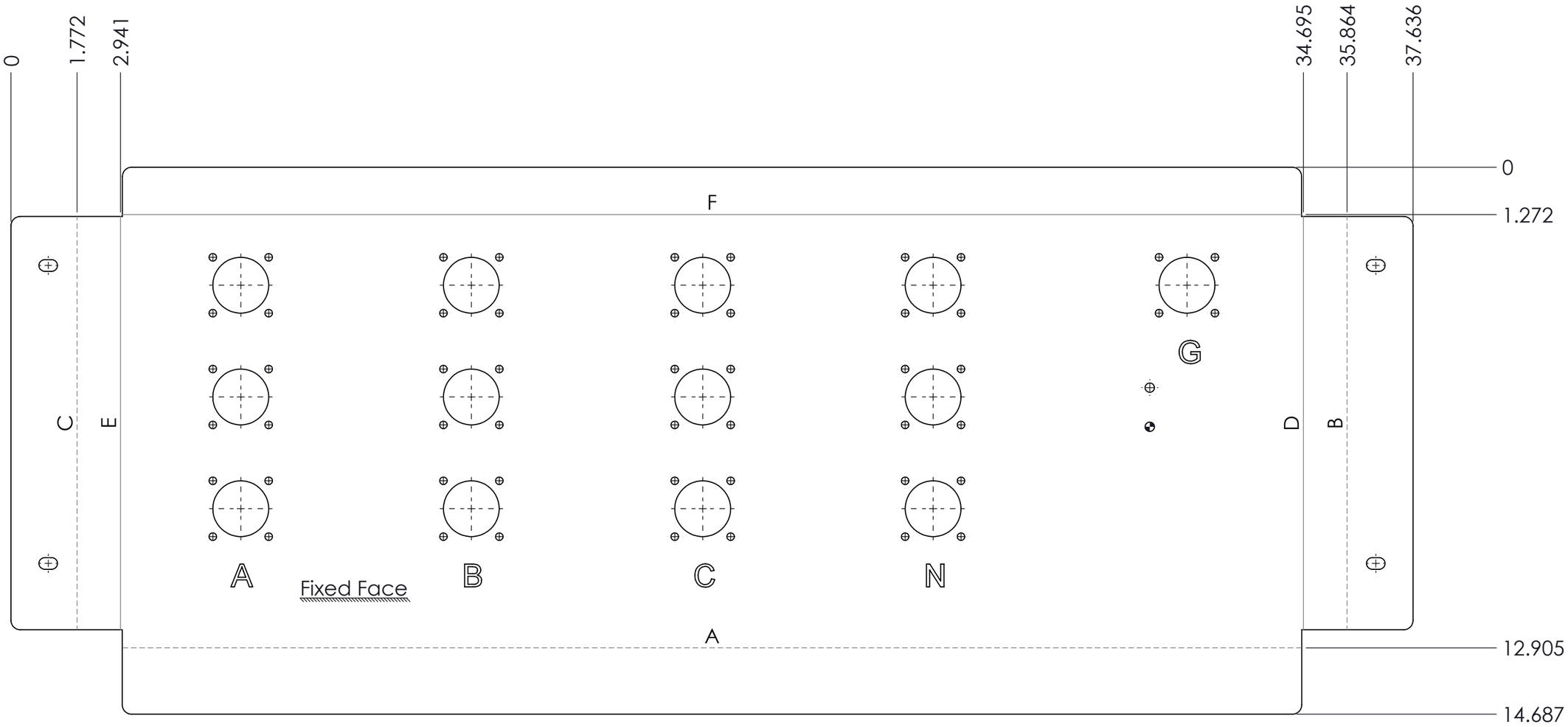

Tag	Direction	Angle	Inner Radius	Bend Deduction
A	DOWN	45°	0.024	0.077
B	DOWN	90°	0.024	0.206
C	DOWN	90°	0.024	0.206
D	UP	90°	0.024	0.206
E	UP	90°	0.024	0.206
F	UP	90°	0.024	0.206

MATERIAL 6.17 lbs

FINISH
BARE

PROPRIETARY AND CONFIDENTIAL

THE INFORMATION CONTAINED IN THIS DRAWING IS THE SOLE PROPERTY OF FOXFAB POWER SOLUTIONS ANY REPRODUCTION IN PART OR AS A WHOLE WITHOUT THE WRITTEN PERMISSION OF FOXFAB POWER SOLUTIONS IS PROHIBITED.

DRAWN BY	SAVED ON
LB	9/8/2025

BD	TOP DIE	BOTTOM DIE
-	1mm	16mm

UNLESS OTHERWISE SPECIFIED:
DIMENSIONS ARE IN INCHES
TOLERANCES:
X ± .25
X.X ± .1
X.XX ± .05
X.XXX ± .025
ANGULAR ±1
INTERPRET DIM AND TOL. PER:
ASME Y14.5

Foxfab Power Solutions
2579-188 ST.
SURREY, BC V3Z 2A1
(604) 460 - 9310
WWW.FOXFAB.COM

TITLE:
CAMPLATE, LB, 1200A, 72x36x30 ENCL

THIRD ANGLE: SIZE **B** SCALE 1:5 REV A1

ITEM NO. DWG. NO. 200-90002 SHEET 2 OF 3

TAG	X LOC	Y LOC	SIZE
A1	-1.99	1.78	0.313 X 0.500 THRU
A2	-1.99	9.78	0.313 X 0.500 THRU
A3	33.65	1.78	0.313 X 0.500 THRU
A4	33.65	9.78	0.313 X 0.500 THRU
B1	27.58	5.45	∅ 0.250 THRU
B2	27.58	6.50	∅ 0.250 THRU

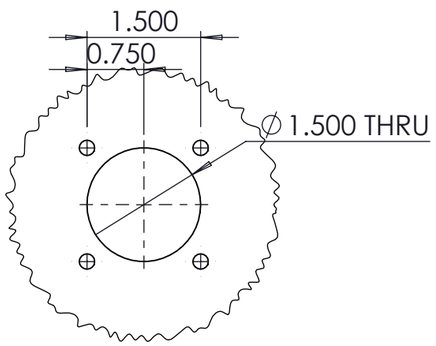

DETAIL A
SCALE 1 : 2

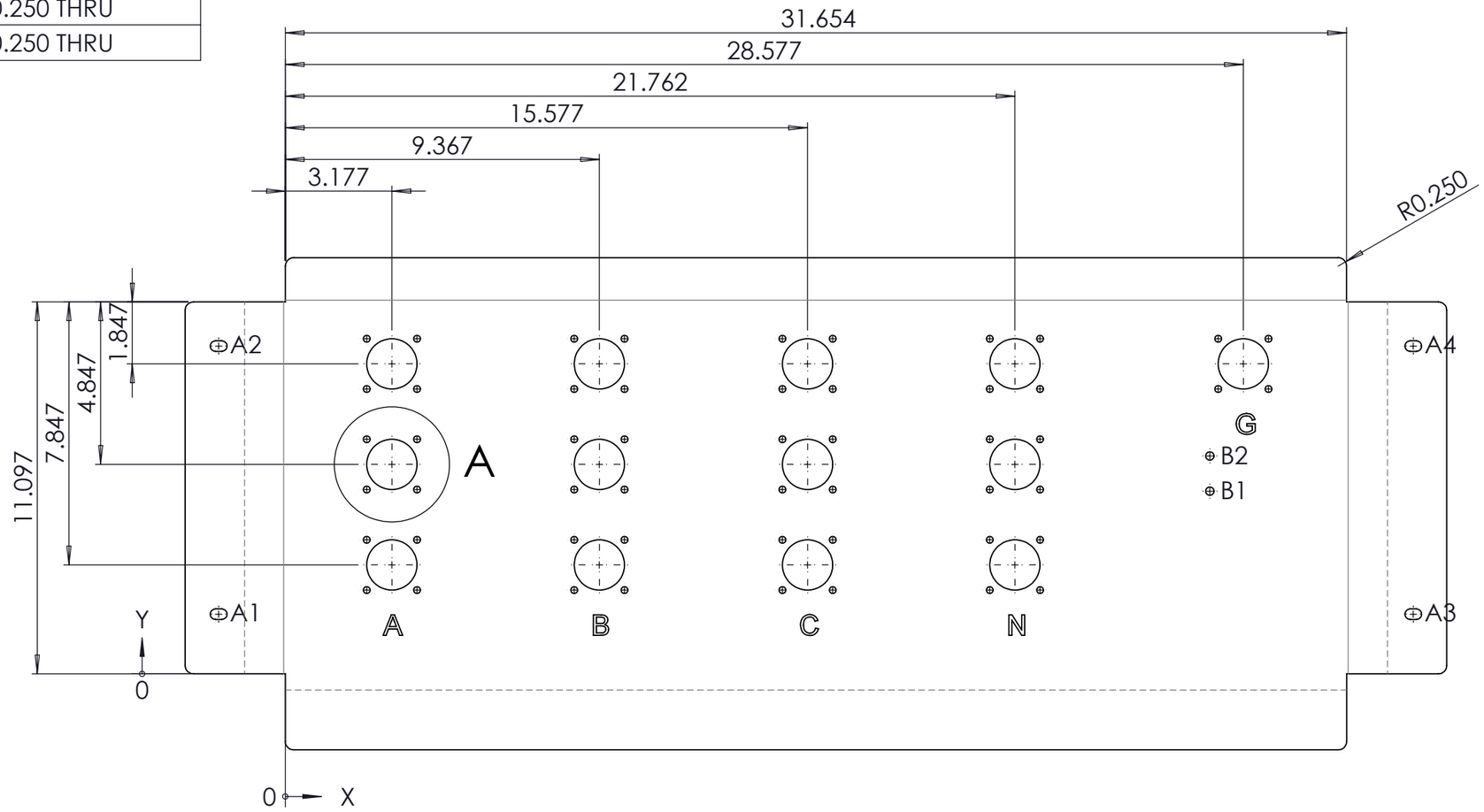

MATERIAL	6.17 lbs	DRAWN BY: LB	SAVED ON: 9/8/2025
FINISH: BARE		BD: - / TOP DIE: 1mm	BOTTOM DIE: 16mm

PROPRIETARY AND CONFIDENTIAL

THE INFORMATION CONTAINED IN THIS DRAWING IS THE SOLE PROPERTY OF FOXFAB POWER SOLUTIONS ANY REPRODUCTION IN PART OR AS A WHOLE WITHOUT THE WRITTEN PERMISSION OF FOXFAB POWER SOLUTIONS IS PROHIBITED.

UNLESS OTHERWISE SPECIFIED:
DIMENSIONS ARE IN INCHES
TOLERANCES:
X ± .25
X.X ± .1
X.XX ± .05
X.XXX ± .025
ANGULAR ± 1
INTERPRET DIM AND TOL. PER:
ASME Y14.5

Foxfab Power Solutions
2579-188 ST.
SURREY, BC V3Z 2A1
(604) 460 - 9310
WWW.FOXFAB.COM

TITLE:
CAMPLATE, LB, 1200A, 72x36x30 ENCL

THIRD ANGLE: | SIZE **B** | SCALE 1:5 | REV A1

ITEM NO. | DWG. NO. 200-90002 | SHEET 3 OF 3

REVISION				
REV.	ZONE	DESCRIPTION	DATE	DRAWNBY
A		INITAL RELEASE	7/22/2025	L. BADONG

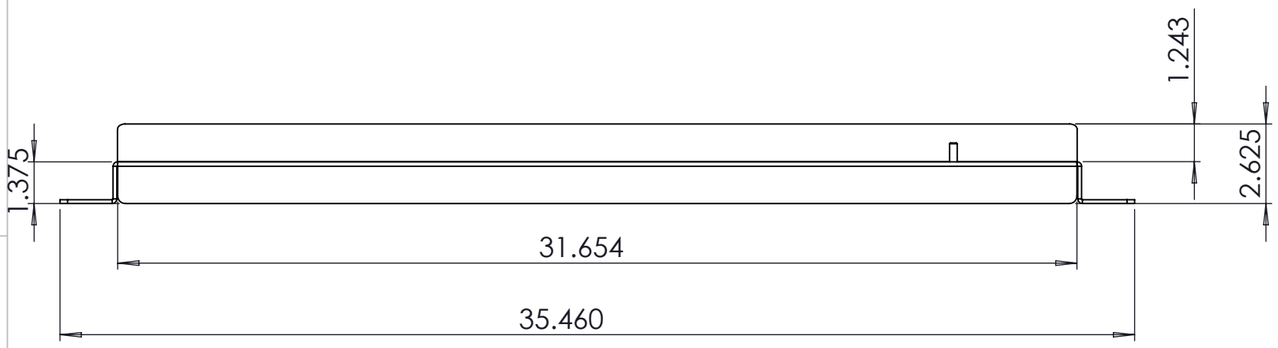

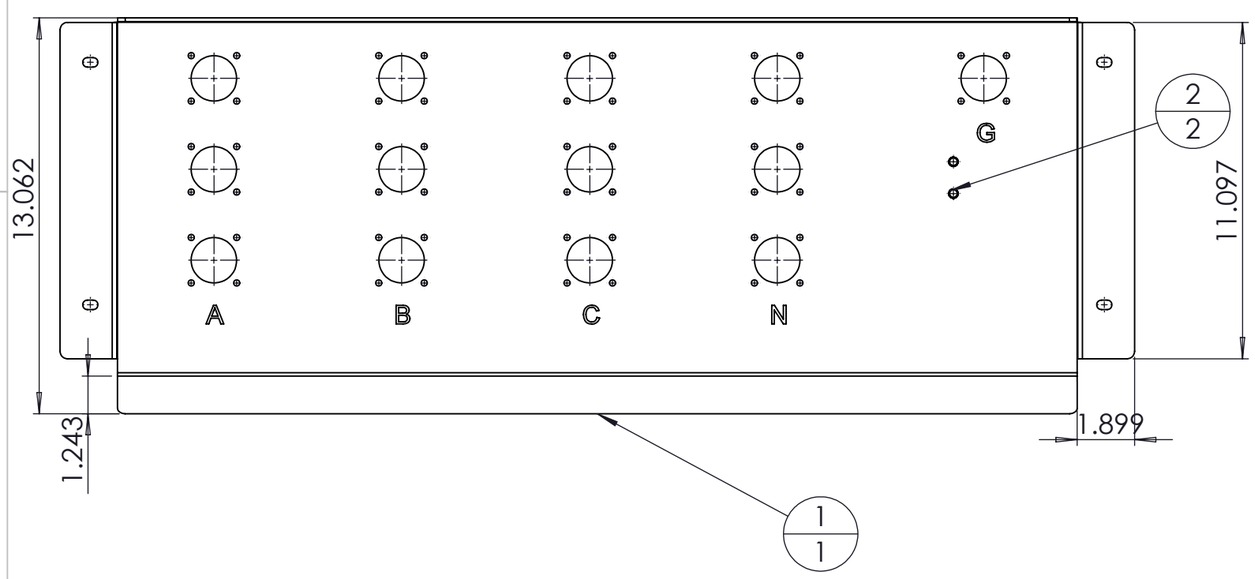

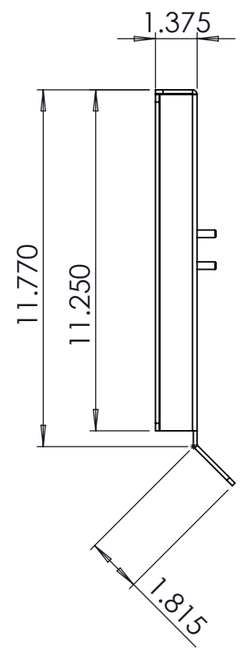

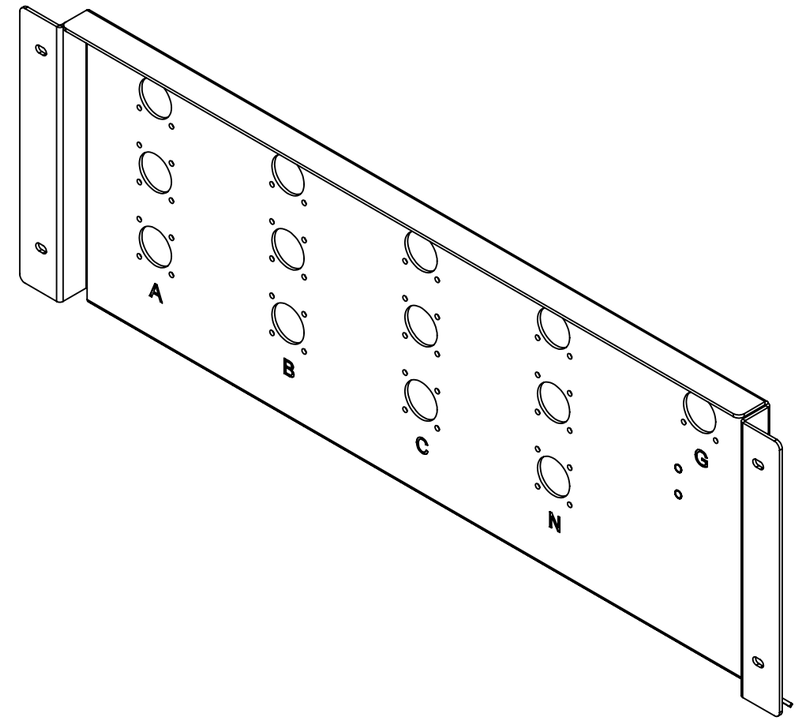

BILL OF MATERIAL

ITEM NO.	PART NUMBER	DESCRIPTION	QTY.
1	200-90002	CAMPLATE, LB, 1200A, 72x36x30 ENCL	1
2	PEM FH-0420-12 ZI		2

MATERIAL 6.17 lbs

FINISH
BARE

PROPRIETARY AND CONFIDENTIAL

THE INFORMATION CONTAINED IN THIS DRAWING IS THE SOLE PROPERTY OF FOXFAB POWER SOLUTIONS ANY REPRODUCTION IN PART OR AS A WHOLE WITHOUT THE WRITTEN PERMISSION OF FOXFAB POWER SOLUTIONS IS PROHIBITED.

DRAWN BY	SAVED ON
LB	7/23/2025

BD	TOP DIE	BOTTOM DIE
-	1mm	16mm

UNLESS OTHERWISE SPECIFIED:
DIMENSIONS ARE IN INCHES
TOLERANCES:
X ± .25
X.X ± .1
X.XX ± .05
X.XXX ± .025
ANGULAR ± 1
INTERPRET DIM AND TOL. PER:
ASME Y14.5

Foxfab
Power Solutions
2579-188 ST.
SURREY, BC V3Z 2A1
(604) 460 - 9310
WWW.FOXFAB.COM

TITLE:
CAMPLATE, LB, 1200A, 72x36x30 ENCL

THIRD ANGLE: | SIZE **B** | SCALE 1:5 | REV A

ITEM NO. | DWG. NO. 200-90002 | SHEET 1 OF 3

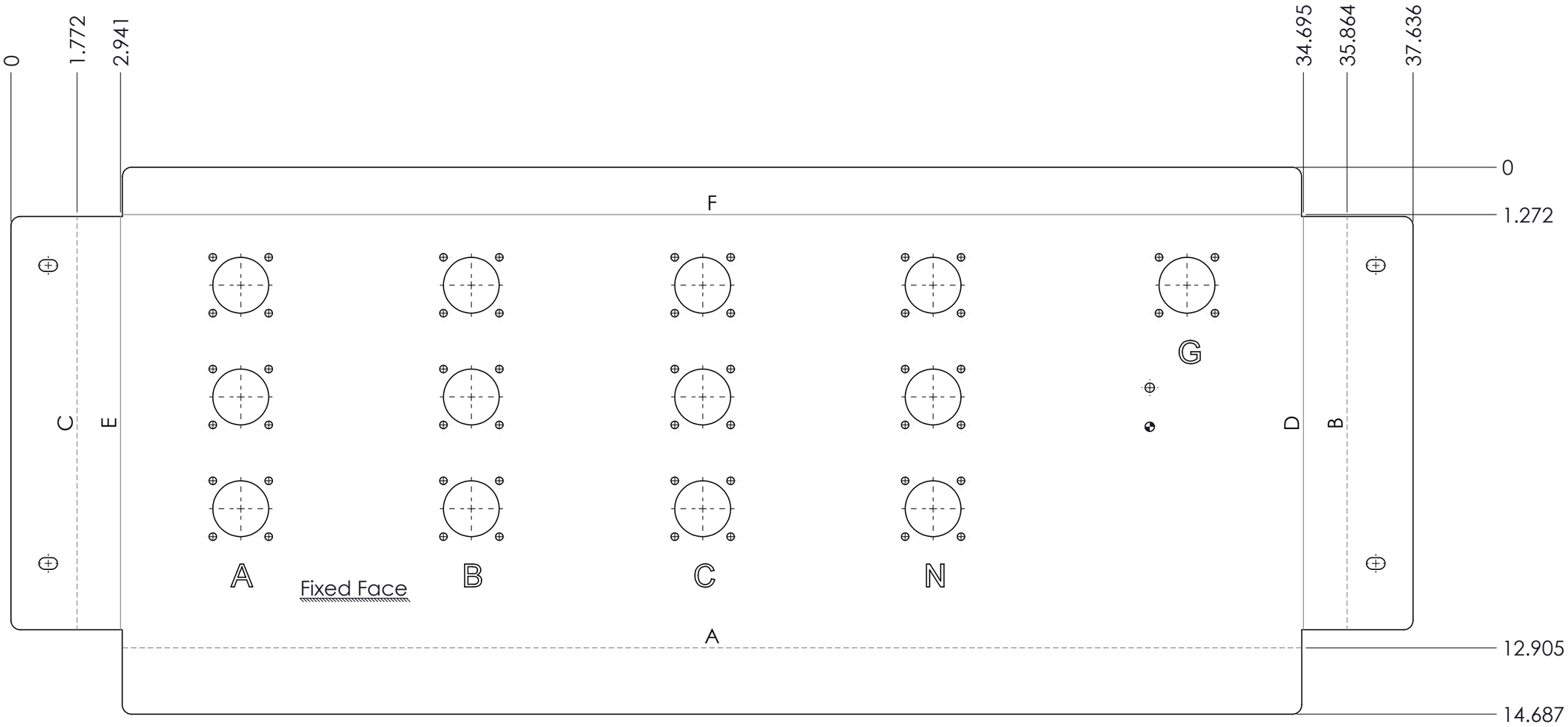

Tag	Direction	Angle	Inner Radius	Bend Deduction
A	DOWN	45°	0.024	0.077
B	DOWN	90°	0.024	0.206
C	DOWN	90°	0.024	0.206
D	UP	90°	0.024	0.206
E	UP	90°	0.024	0.206
F	UP	90°	0.024	0.206

MATERIAL 6.17 lbs

FINISH
BARE

PROPRIETARY AND CONFIDENTIAL

THE INFORMATION CONTAINED IN THIS DRAWING IS THE SOLE PROPERTY OF FOXFAB POWER SOLUTIONS ANY REPRODUCTION IN PART OR AS A WHOLE WITHOUT THE WRITTEN PERMISSION OF FOXFAB POWER SOLUTIONS IS PROHIBITED.

DRAWN BY	SAVED ON
LB	7/23/2025

BD	TOP DIE	BOTTOM DIE
-	1mm	16mm

UNLESS OTHERWISE SPECIFIED:
DIMENSIONS ARE IN INCHES
TOLERANCES:
X ± .25
X.X ± .1
X.XX ± .05
X.XXX ± .025
ANGULAR ± 1
INTERPRET DIM AND TOL. PER:
ASME Y14.5

Foxfab Power Solutions
2579-188 ST.
SURREY, BC V3Z 2A1
(604) 460 - 9310
WWW.FOXFAB.COM

TITLE:
CAMPLATE, LB, 1200A, 72x36x30 ENCL

THIRD ANGLE: SIZE **B** SCALE 1:5 REV A

ITEM NO. DWG. NO. 200-90002 SHEET 2 OF 3

TAG	X LOC	Y LOC	SIZE
A1	-1.99	1.78	0.313 X 0.500 THRU
A2	-1.99	9.78	0.313 X 0.500 THRU
A3	33.65	1.78	0.313 X 0.500 THRU
A4	33.65	9.78	0.313 X 0.500 THRU
B1	27.58	5.45	∅ 0.250 THRU
B2	27.58	6.50	∅ 0.250 THRU

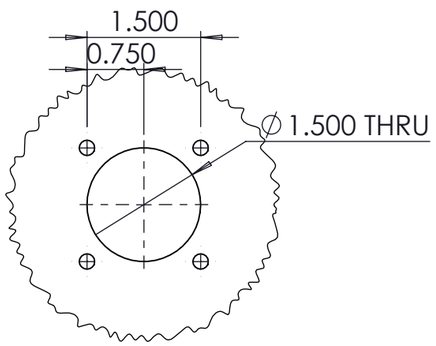

DETAIL A
SCALE 1 : 2

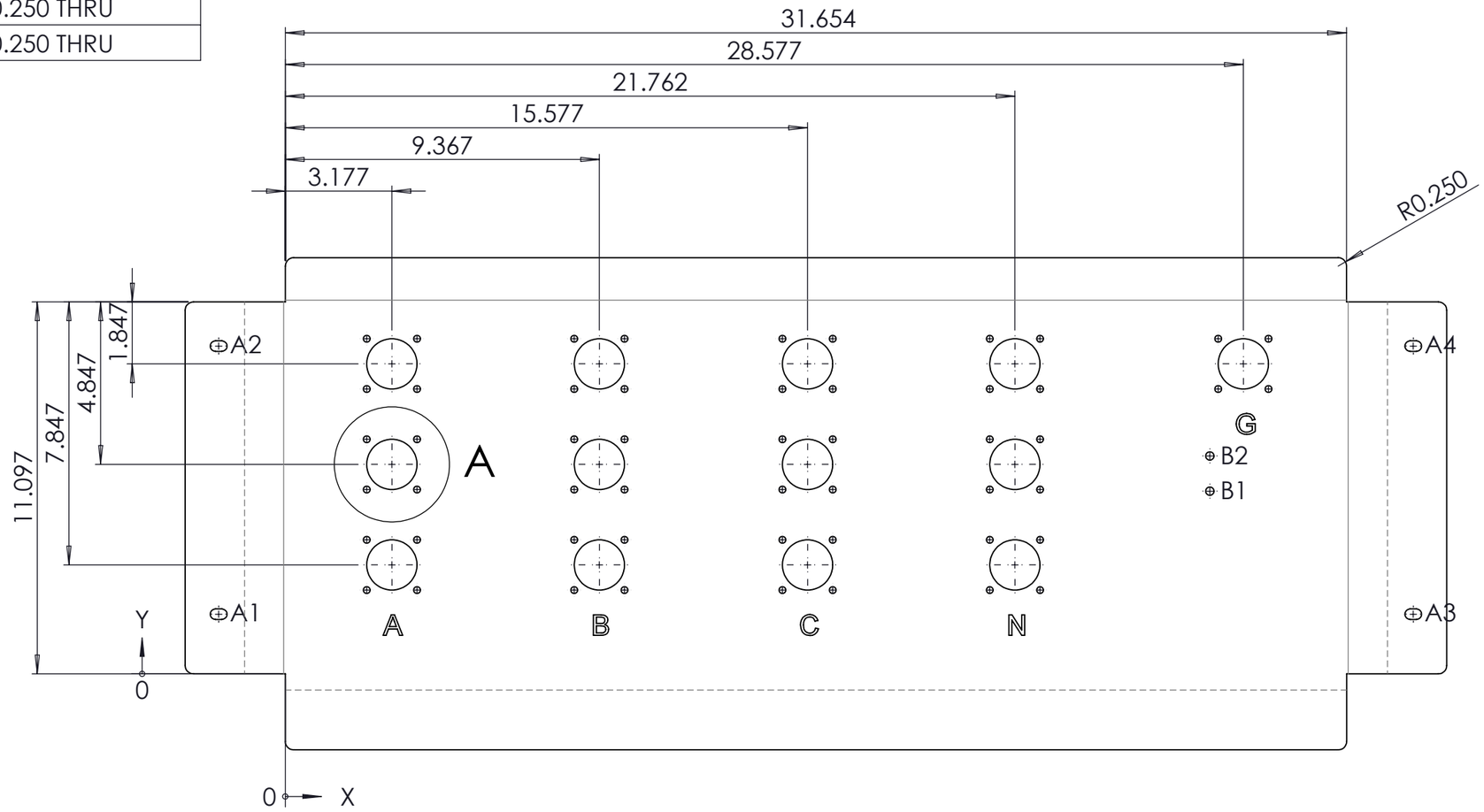

MATERIAL	6.17 lbs	DRAWN BY: LB	SAVED ON: 7/23/2025
FINISH: BARE		BD: -	TOP DIE: 1mm / BOTTOM DIE: 16mm

PROPRIETARY AND CONFIDENTIAL

THE INFORMATION CONTAINED IN THIS DRAWING IS THE SOLE PROPERTY OF FOXFAB POWER SOLUTIONS ANY REPRODUCTION IN PART OR AS A WHOLE WITHOUT THE WRITTEN PERMISSION OF FOXFAB POWER SOLUTIONS IS PROHIBITED.

UNLESS OTHERWISE SPECIFIED:
DIMENSIONS ARE IN INCHES
TOLERANCES:
X ± .25
X.X ± .1
X.XX ± .05
X.XXX ± .025
ANGULAR ± 1
INTERPRET DIM AND TOL. PER:
ASME Y14.5

Foxfab Power Solutions
2579-188 ST.
SURREY, BC V3Z 2A1
(604) 460 - 9310
WWW.FOXFAB.COM

TITLE:
CAMPLATE, LB, 1200A, 72x36x30 ENCL

THIRD ANGLE: | SIZE **B** | SCALE 1:5 | REV A

ITEM NO. | DWG. NO. 200-90002 | SHEET 3 OF 3

REVISION				
REV.	ZONE	DESCRIPTION	DATE	DRAWNBY
A		INITIAL RELEASE	7/22/2025	L. BADONG

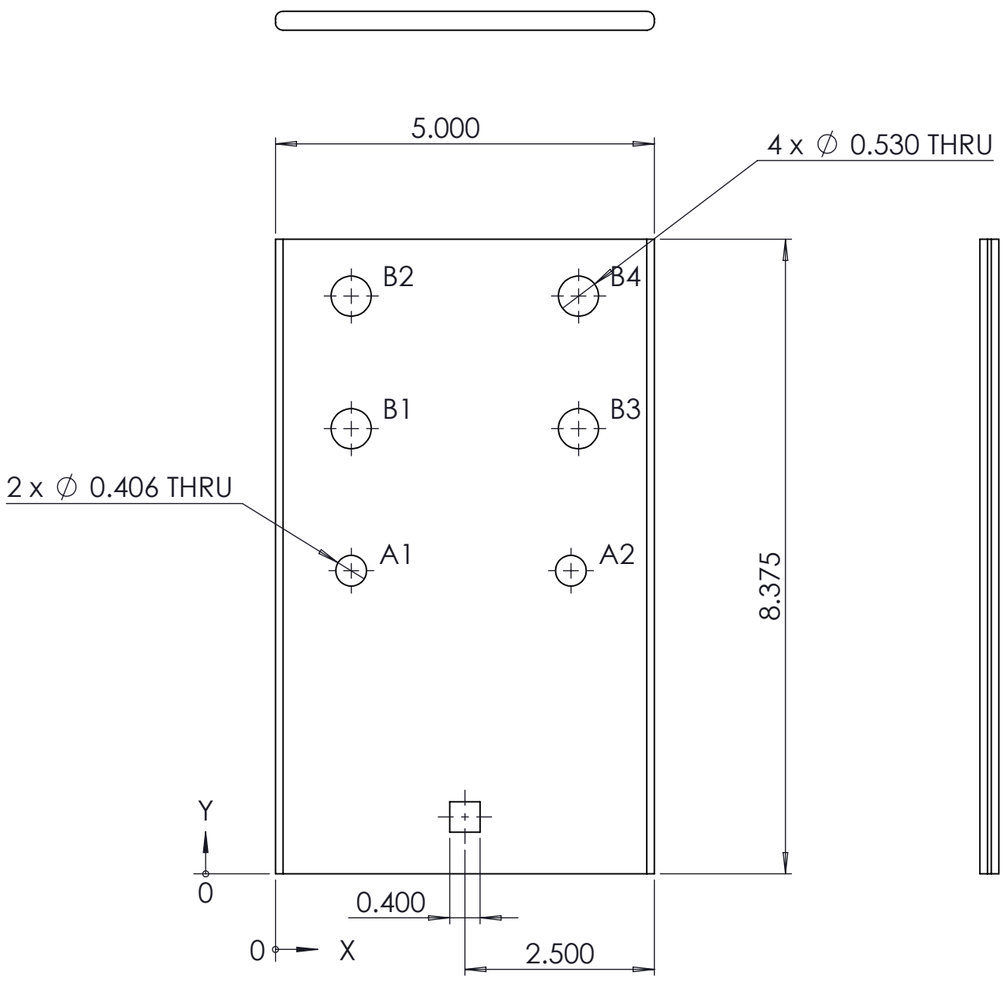

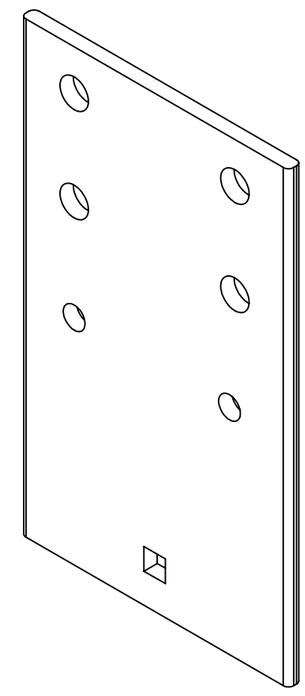

TAG	X LOC	Y LOC	SIZE
A1	1.00	4.00	∅ 0.406 THRU
A2	3.90	4.00	∅ 0.406 THRU
B1	1.00	5.88	∅ 0.530 THRU
B2	1.00	7.63	∅ 0.530 THRU
B3	4.00	5.88	∅ 0.530 THRU
B4	4.00	7.63	∅ 0.530 THRU

MATERIAL 3.238 lbs
0.25 Copper

FINISH
BARE

PROPRIETARY AND CONFIDENTIAL

THE INFORMATION CONTAINED IN THIS DRAWING IS THE SOLE PROPERTY OF FOXFAB POWER SOLUTIONS. ANY REPRODUCTION IN PART OR AS A WHOLE WITHOUT THE WRITTEN PERMISSION OF FOXFAB POWER SOLUTIONS IS PROHIBITED.

DRAWN BY: LB
SAVED ON: 7/23/2025
BD: -
TOP DIE: -
BOTTOM DIE: -

UNLESS OTHERWISE SPECIFIED:
DIMENSIONS ARE IN INCHES
TOLERANCES:
X ± .25
X.X ± .1
X.XX ± .05
X.XXX ± .025
ANGULAR ± 1
INTERPRET DIM AND TOL. PER:
ASME Y14.5

Foxfab Power Solutions
2579-188 ST.
SURREY, BC V3Z 2A1
(604) 460 - 9310
WWW.FOXFAB.COM

TITLE:
BUS, 1600A FUSE MOUNT

THIRD ANGLE:
SIZE **B**
SCALE 1:2
REV A
ITEM NO.
DWG. NO. 240-90008
SHEET 1 OF 1

REVISION				
REV.	ZONE	DESCRIPTION	DATE	DRAWNBY
A		INITIAL RELEASE	7/22/2025	L. BADONG

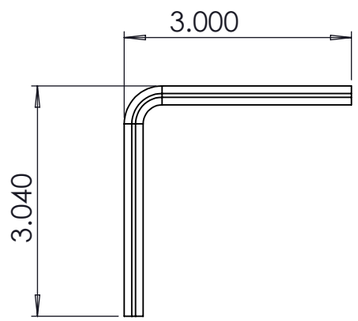

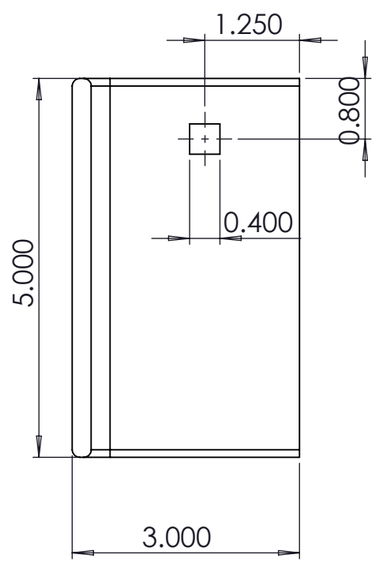

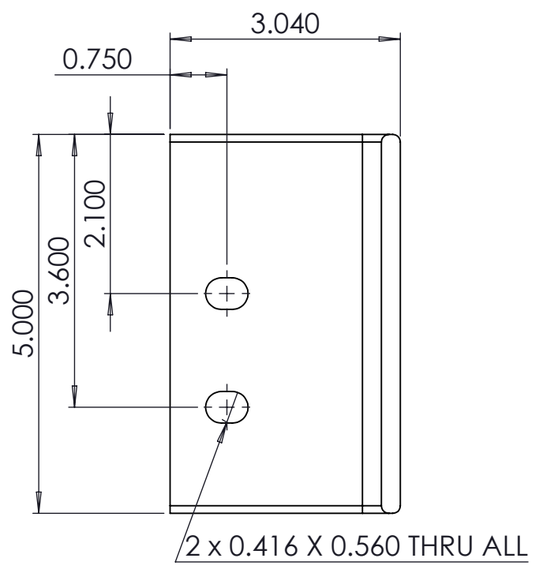

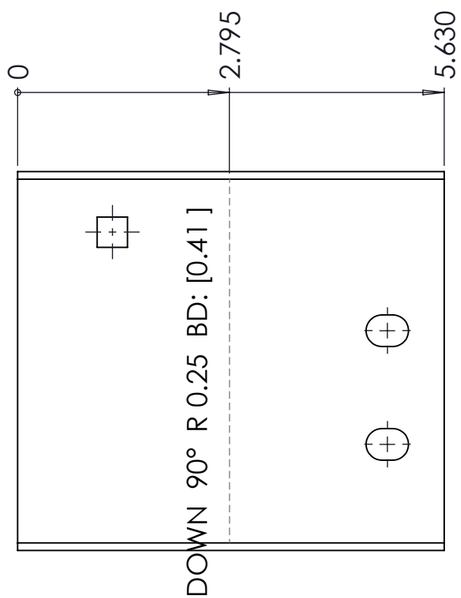

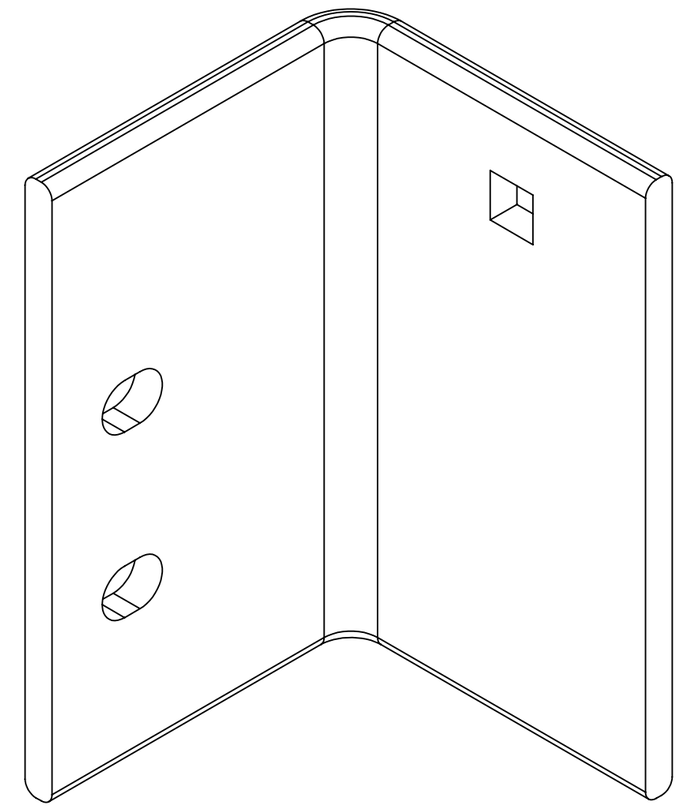

MATERIAL 2.203 lbs 0.25 Copper	DRAWN BY LB	SAVED ON 7/23/2025	Foxfab Power Solutions 2579-188 ST. SURREY, BC V3Z 2A1 (604) 460 - 9310 WWW.FOXFAB.COM
FINISH BARE	BD 0.41"	TOP DIE 0.25"	BOTTOM DIE 1.26"	TITLE: BUS, L-SHAPE, 1200A FUSE CONNECTOR MOUNT
PROPRIETARY AND CONFIDENTIAL THE INFORMATION CONTAINED IN THIS DRAWING IS THE SOLE PROPERTY OF FOXFAB POWER SOLUTIONS. ANY REPRODUCTION IN PART OR AS A WHOLE WITHOUT THE WRITTEN PERMISSION OF FOXFAB POWER SOLUTIONS IS PROHIBITED.	UNLESS OTHERWISE SPECIFIED: DIMENSIONS ARE IN INCHES TOLERANCES: X ± .25 X.X ± .1 X.XX ± .05 X.XXX ± .025 ANGULAR ± 1 INTERPRET DIM AND TOL. PER: **ASME Y14.5**	THIRD ANGLE:	SIZE **B**	SCALE 1:2	REV A
	ITEM NO.	DWG. NO. 240-90009	SHEET 1 OF 1

REVISION				
REV.	ZONE	DESCRIPTION	DATE	DRAWNBY
A		INITIAL RELEASE	7/22/2025	L. BADONG

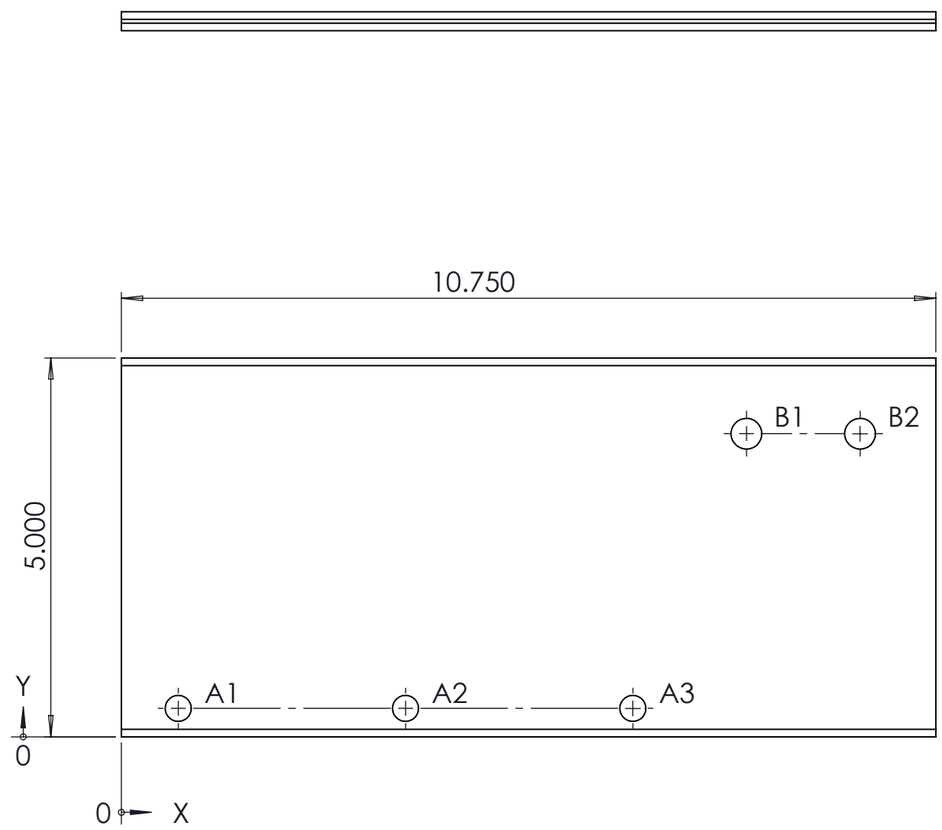

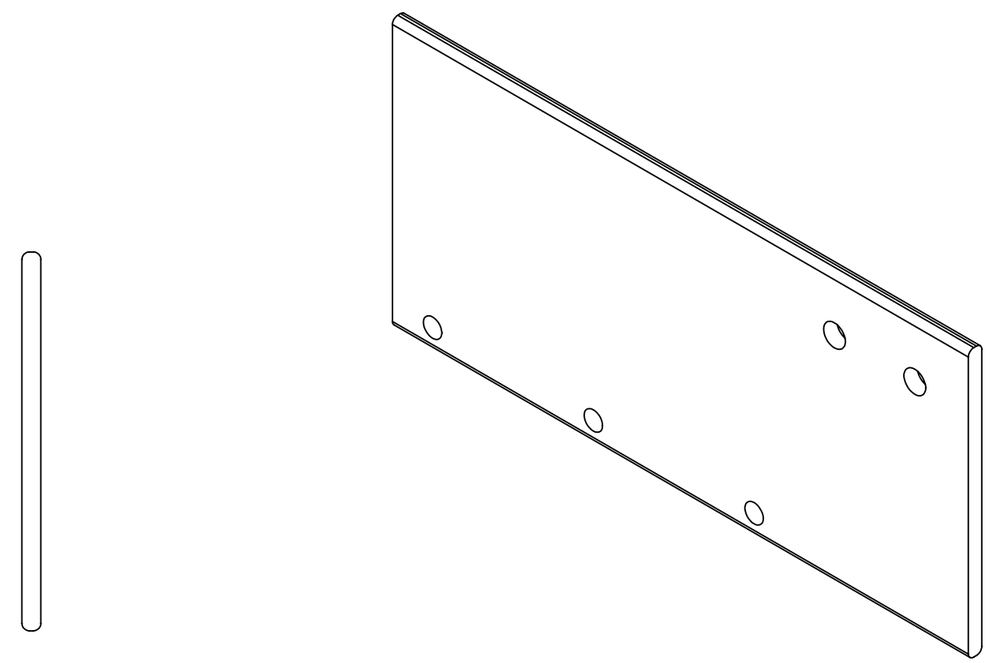

TAG	X LOC	Y LOC	SIZE
A1	0.75	0.38	∅ 0.344 THRU
A2	3.75	0.38	∅ 0.344 THRU
A3	6.75	0.38	∅ 0.344 THRU
B1	8.25	4.00	∅ 0.406 THRU
B2	9.75	4.00	∅ 0.406 THRU

MATERIAL 4.25 lbs
0.25 C1100 CU BAR

FINISH
BARE

PROPRIETARY AND CONFIDENTIAL

THE INFORMATION CONTAINED IN THIS DRAWING IS THE SOLE PROPERTY OF FOXFAB POWER SOLUTIONS ANY REPRODUCTION IN PART OR AS A WHOLE WITHOUT THE WRITTEN PERMISSION OF FOXFAB POWER SOLUTIONS IS PROHIBITED.

DRAWN BY: LB
SAVED ON: 7/23/2025
BD: -
TOP DIE: -
BOTTOM DIE: -

UNLESS OTHERWISE SPECIFIED:
DIMENSIONS ARE IN INCHES
TOLERANCES:
X ± .25
X.X ± .1
X.XX ± .05
X.XXX ± .025
ANGULAR ± 1
INTERPRET DIM AND TOL. PER:
ASME Y14.5

Foxfab Power Solutions
2579-188 ST.
SURREY, BC V3Z 2A1
(604) 460 - 9310
WWW.FOXFAB.COM

TITLE:
BUS, CAMLOCK ADAPTER, 1200A FUSE MOD

THIRD ANGLE: SIZE **B** SCALE 1:2 REV A

ITEM NO. DWG. NO. 240-90010 SHEET 1 OF 1

REVISION				
REV.	ZONE	DESCRIPTION	DATE	DRAWNBY
A		INITIAL RELEASE	7/22/2025	L. BADONG

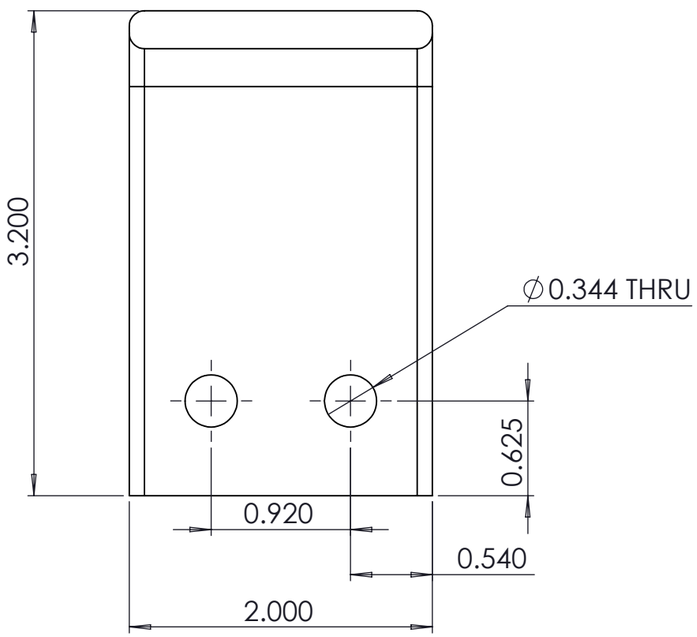

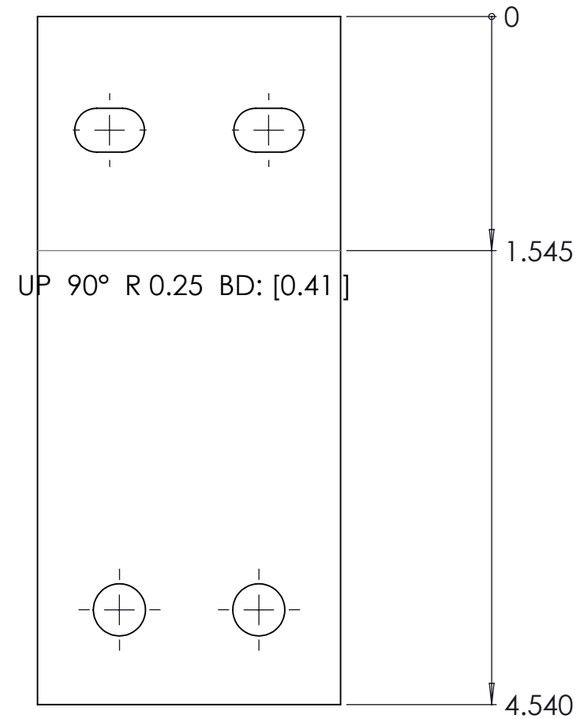

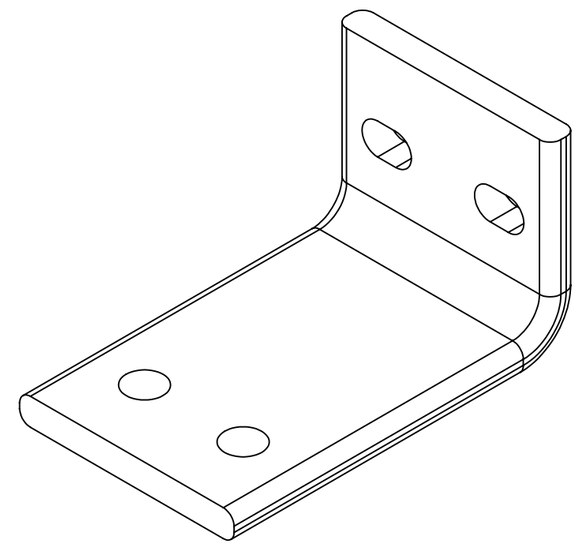

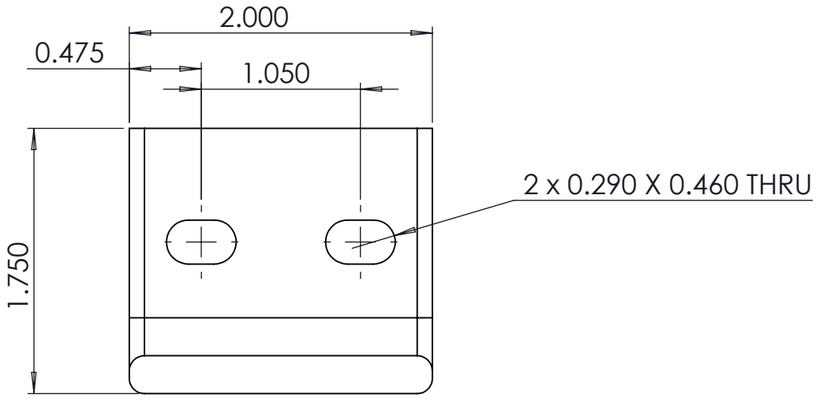

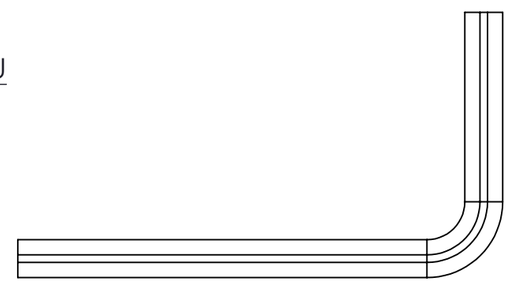

MATERIAL lbs 0.25 Copper	DRAWN BY LB	SAVED ON 7/23/2025	Foxfab Power Solutions 2579-188 ST. SURREY, BC V3Z 2A1 (604) 460 - 9310 WWW.FOXFAB.COM
FINISH BARE	BD 0.41" / TOP DIE 0.25"	BOTTOM DIE 1.26"	TITLE: BUS BAR, CAMPLATE, UPTO 1200A, GROUND COMMON
PROPRIETARY AND CONFIDENTIAL THE INFORMATION CONTAINED IN THIS DRAWING IS THE SOLE PROPERTY OF FOXFAB POWER SOLUTIONS ANY REPRODUCTION IN PART OR AS A WHOLE WITHOUT THE WRITTEN PERMISSION OF FOXFAB POWER SOLUTIONS IS PROHIBITED.	UNLESS OTHERWISE SPECIFIED: DIMENSIONS ARE IN INCHES TOLERANCES: X ± .25 X.X ± .1 X.XX ± .05 X.XXX ± .025 ANGULAR ± 1 INTERPRET DIM AND TOL. PER: **ASME Y14.5**	THIRD ANGLE: SIZE **B**	SCALE 1:1 / REV A
		ITEM NO. / DWG. NO. 240-90012	SHEET 1 OF 1

REVISION				
REV.	ZONE	DESCRIPTION	DATE	DRAWNBY
A		INITIAL RELEASE	7/22/2025	L. BADONG

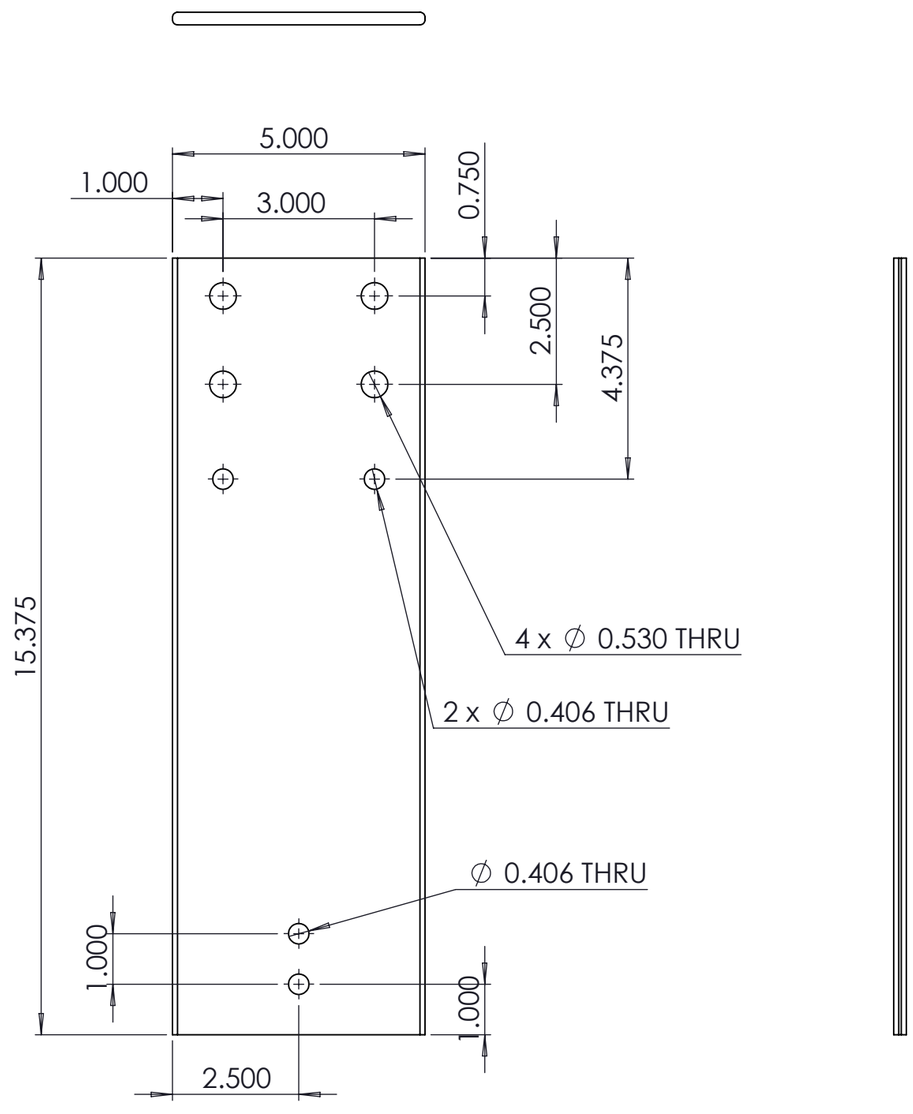

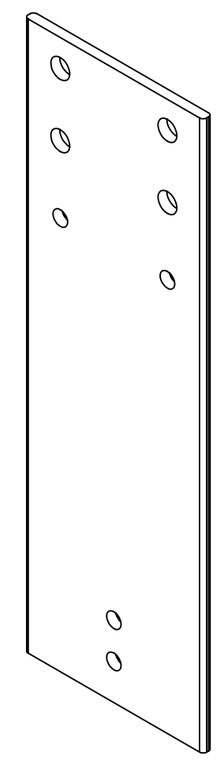

MATERIAL 6.02 lbs 0.25 Copper	DRAWN BY LB	SAVED ON 7/23/2025	Foxfab Power Solutions 2579-188 ST. SURREY, BC V3Z 2A1 (604) 460 - 9310 WWW.FOXFAB.COM
FINISH BARE	BD - / TOP DIE - / BOTTOM DIE -		TITLE: BUS, 1600A FUSE MOUNT
PROPRIETARY AND CONFIDENTIAL THE INFORMATION CONTAINED IN THIS DRAWING IS THE SOLE PROPERTY OF FOXFAB POWER SOLUTIONS ANY REPRODUCTION IN PART OR AS A WHOLE WITHOUT THE WRITTEN PERMISSION OF FOXFAB POWER SOLUTIONS IS PROHIBITED.	UNLESS OTHERWISE SPECIFIED: DIMENSIONS ARE IN INCHES TOLERANCES: X ± .25 X.X ± .1 X.XX ± .05 X.XXX ± .025 ANGULAR ± 1 INTERPRET DIM AND TOL. PER: **ASME Y14.5**	THIRD ANGLE:	SIZE **B** / SCALE 1:5 / REV A
		ITEM NO. / DWG. NO. 240-90013	SHEET 1 OF 1

REVISION				
REV.	ZONE	DESCRIPTION	DATE	DRAWNBY
A		INITIAL RELEASE	7/22/2025	L. BADONG

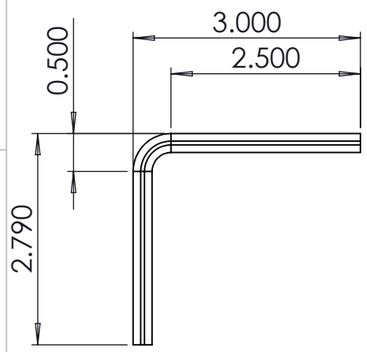

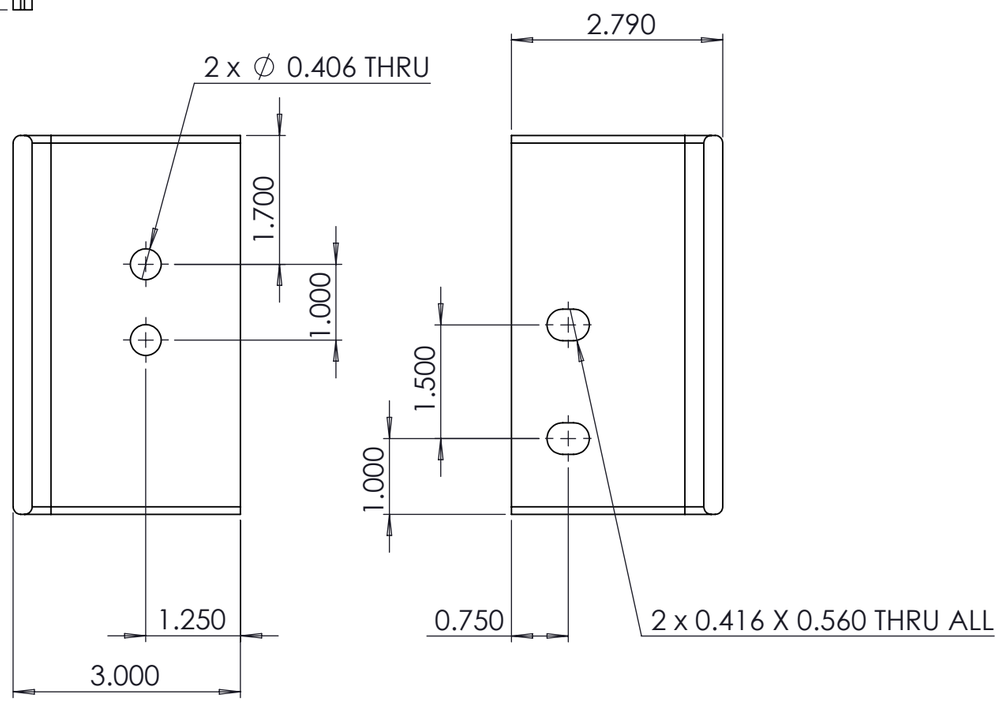

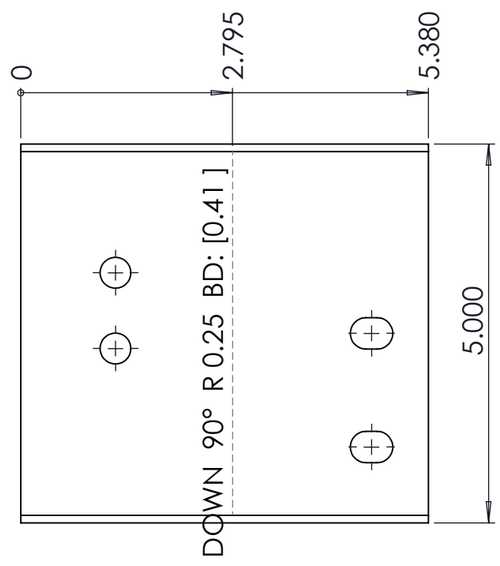

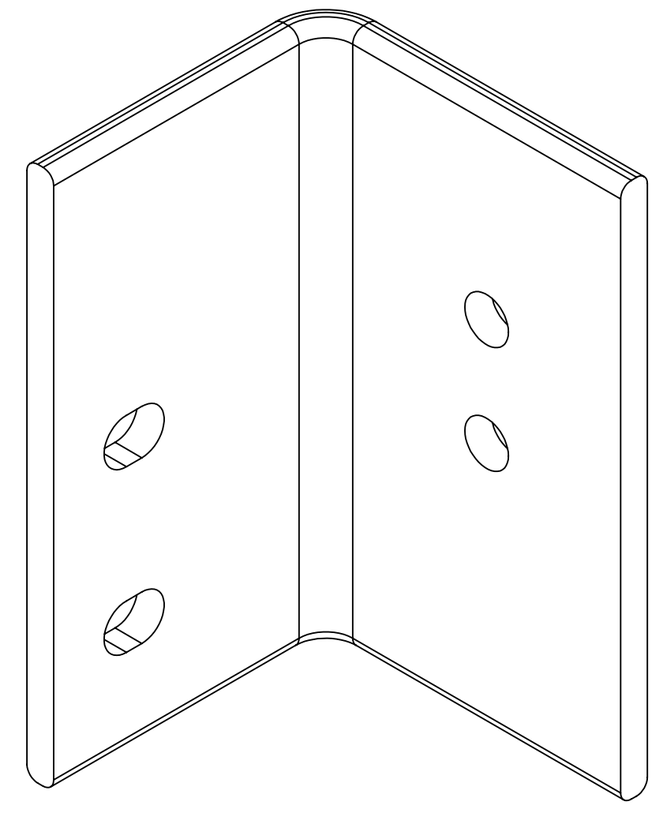

MATERIAL 2.095 lbs 0.25 Copper	DRAWN BY LB	SAVED ON 7/23/2025	Foxfab Power Solutions 2579-188 ST. SURREY, BC V3Z 2A1 (604) 460 - 9310 WWW.FOXFAB.COM
FINISH BARE	BD 0.410" / TOP DIE 0.25"	BOTTOM DIE 1.26"	TITLE: BUS, L-SHAPE, 1200A FUSE CONNECTOR MOUNT, NEUTRAL
PROPRIETARY AND CONFIDENTIAL THE INFORMATION CONTAINED IN THIS DRAWING IS THE SOLE PROPERTY OF FOXFAB POWER SOLUTIONS ANY REPRODUCTION IN PART OR AS A WHOLE WITHOUT THE WRITTEN PERMISSION OF FOXFAB POWER SOLUTIONS IS PROHIBITED.	UNLESS OTHERWISE SPECIFIED: DIMENSIONS ARE IN INCHES TOLERANCES: X ± .25 X.X ± .1 X.XX ± .05 X.XXX ± .025 ANGULAR ± 1 INTERPRET DIM AND TOL. PER: **ASME Y14.5**		THIRD ANGLE: SIZE **B** SCALE 1:2 REV A ITEM NO. DWG. NO. 240-90014 SHEET 1 OF 1

REVISION				
REV.	ZONE	DESCRIPTION	DATE	DRAWNBY
A		INITIAL RELEASE	7/22/2025	L. BADONG

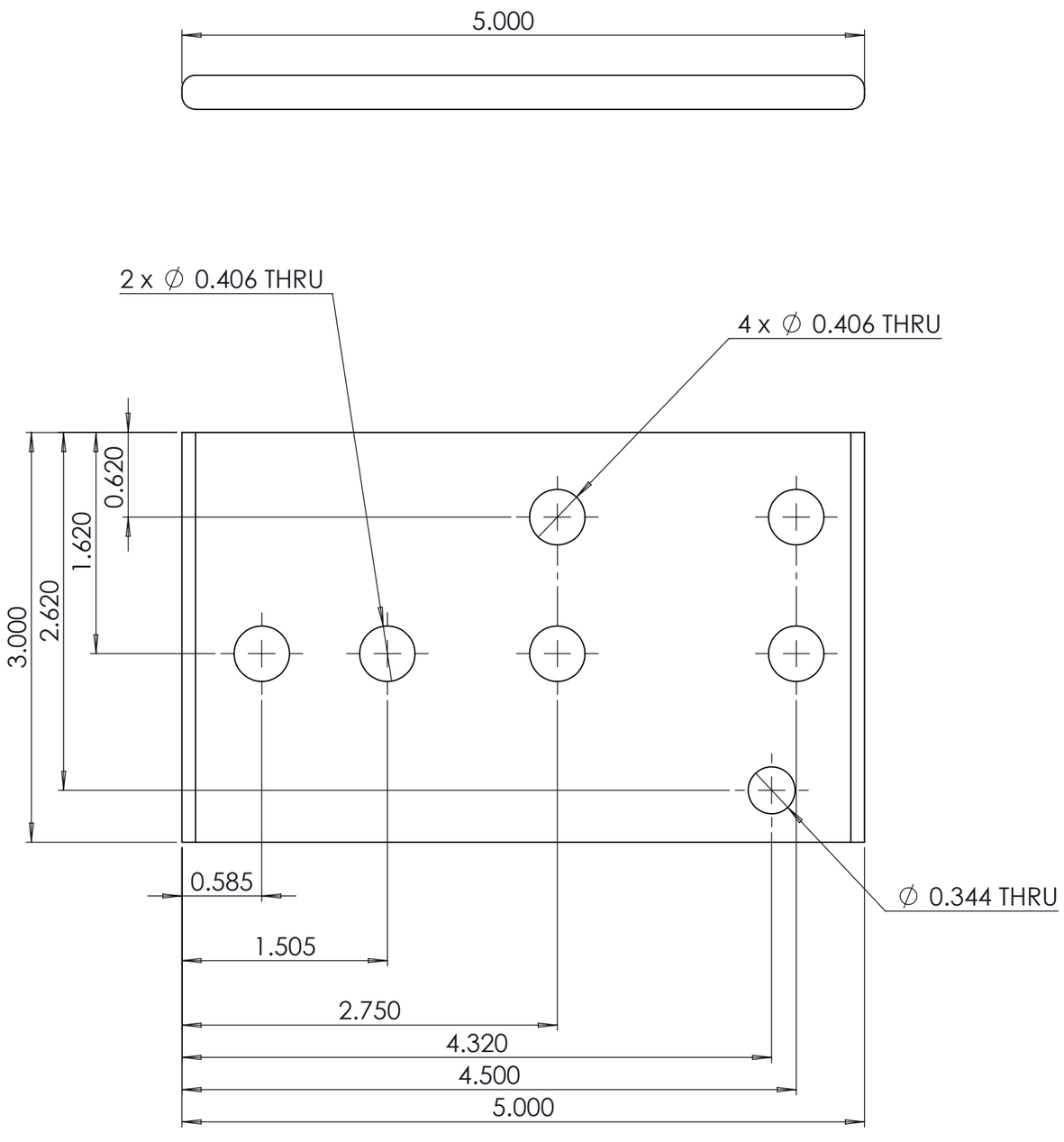

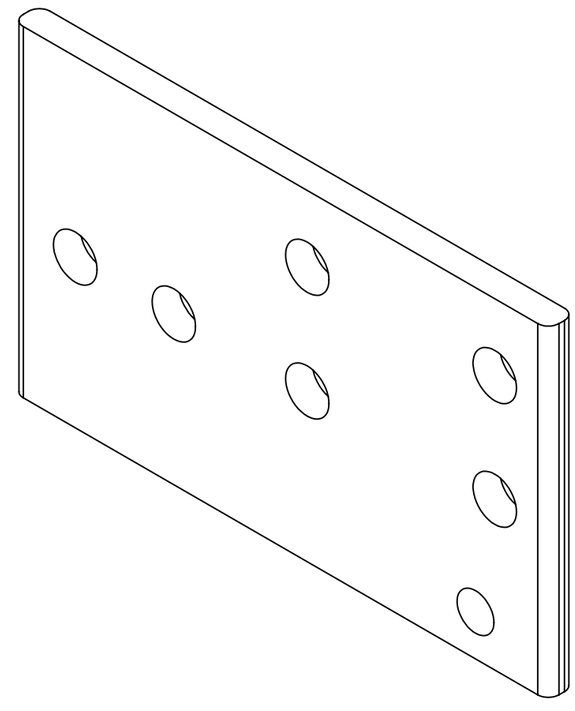

MATERIAL: 0.25 Copper (lbs)	DRAWN BY: LB	SAVED ON: 7/23/2025	Foxfab Power Solutions — 2579-188 ST. SURREY, BC V3Z 2A1 (604) 460 - 9310 WWW.FOXFAB.COM
FINISH: BARE	BD: - / TOP DIE: - / BOTTOM DIE: -		TITLE: BUS BAR, CAMPLATE, UPTO 1200A, GROUND COMMON
PROPRIETARY AND CONFIDENTIAL THE INFORMATION CONTAINED IN THIS DRAWING IS THE SOLE PROPERTY OF FOXFAB POWER SOLUTIONS ANY REPRODUCTION IN PART OR AS A WHOLE WITHOUT THE WRITTEN PERMISSION OF FOXFAB POWER SOLUTIONS IS PROHIBITED.	UNLESS OTHERWISE SPECIFIED: DIMENSIONS ARE IN INCHES TOLERANCES: X ± .25, X.X ± .1, X.XX ± .05, X.XXX ± .025, ANGULAR ± 1, INTERPRET DIM AND TOL. PER: **ASME Y14.5**		THIRD ANGLE: / SIZE **B** / SCALE 1:2 / REV A
			ITEM NO. / DWG. NO. 240-90015 / SHEET 1 OF 1

REVISION				
REV.	ZONE	DESCRIPTION	DATE	DRAWNBY
A		INITIAL RELEASE	2/21/2019	M. L
B	B7	NOTCHES ADDED	3/8/2022	P.TA

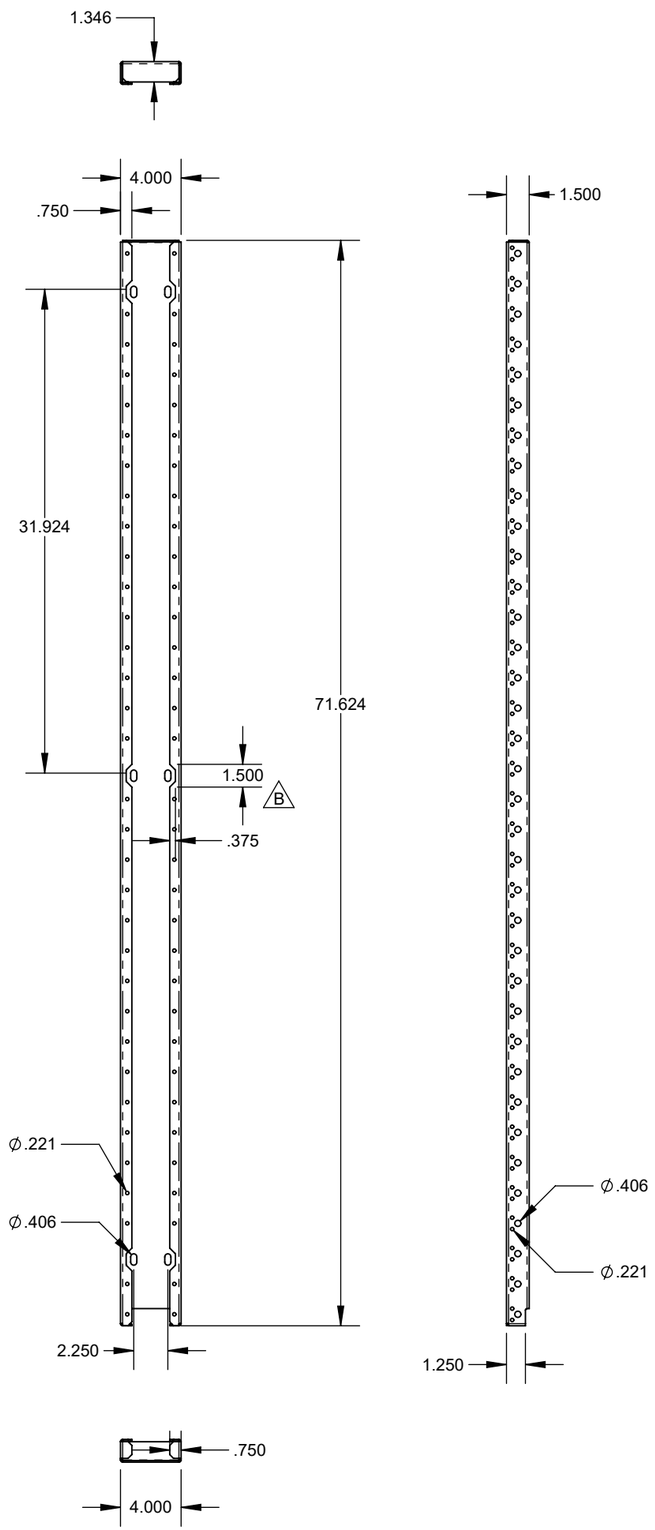

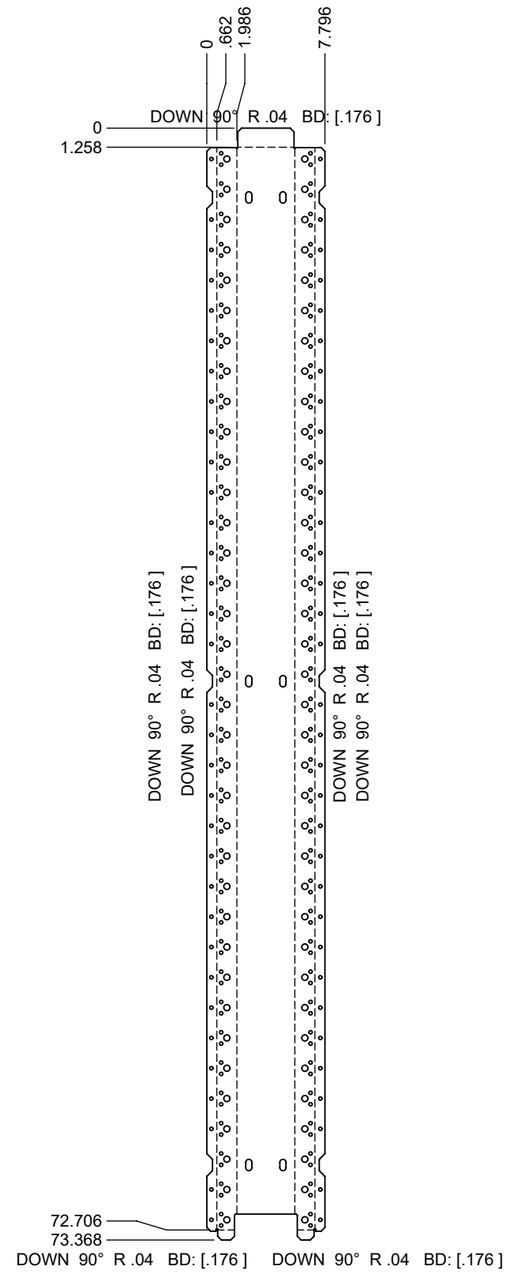

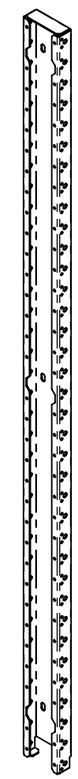

REQUIRED **2** PCS PER ASSEMBLY

MATERIAL 16.16 lbs 0.104 GALVANIZED CRS	DRAWN BY P.TA	SAVED ON 3/8/2022	Foxfab Power Solutions 2579-188 ST. SURREY, BC V3Z 2A1 (604) 460 - 9310 WWW.FOXFAB.COM
FINISH BARE	BD 0.206" / TOP DIE 1mm / BOTTOM DIE 16mm		TITLE: FRAME, VERTICAL BEAM,71-5/8 X 4
PROPRIETARY AND CONFIDENTIAL THE INFORMATION CONTAINED IN THIS DRAWING IS THE SOLE PROPERTY OF FOXFAB POWER SOLUTIONS ANY REPRODUCTION IN PART OR AS A WHOLE WITHOUT THE WRITTEN PERMISSION OF FOXFAB POWER SOLUTIONS IS PROHIBITED.	UNLESS OTHERWISE SPECIFIED: DIMENSIONS ARE IN INCHES TOLERANCES: X ± .25 X.X ± .1 X.XX ± .05 X.XXX ± .025 ANGULAR ±1 INTERPRET DIM AND TOL. PER: **ASME Y14.5**		THIRD ANGLE: SIZE **B** SCALE 1:10 REV B ITEM NO. DWG. NO. 250-20120 rB SHEET 1 OF 1

REVISION				
REV.	ZONE	DESCRIPTION	DATE	DRAWNBY

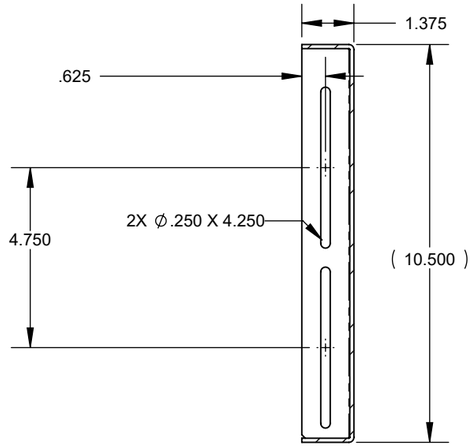

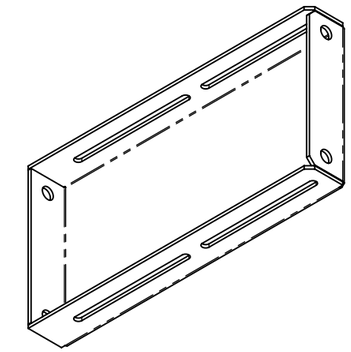

SECTION A-A

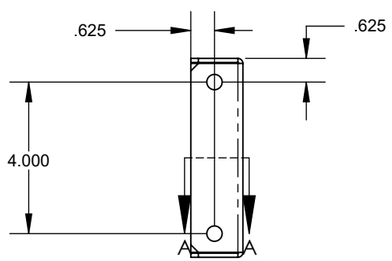

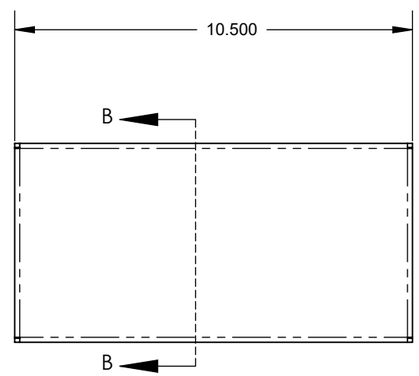

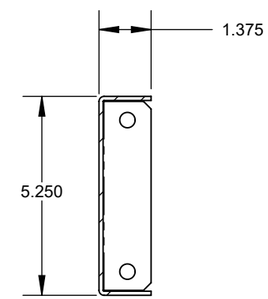

SECTION B-B

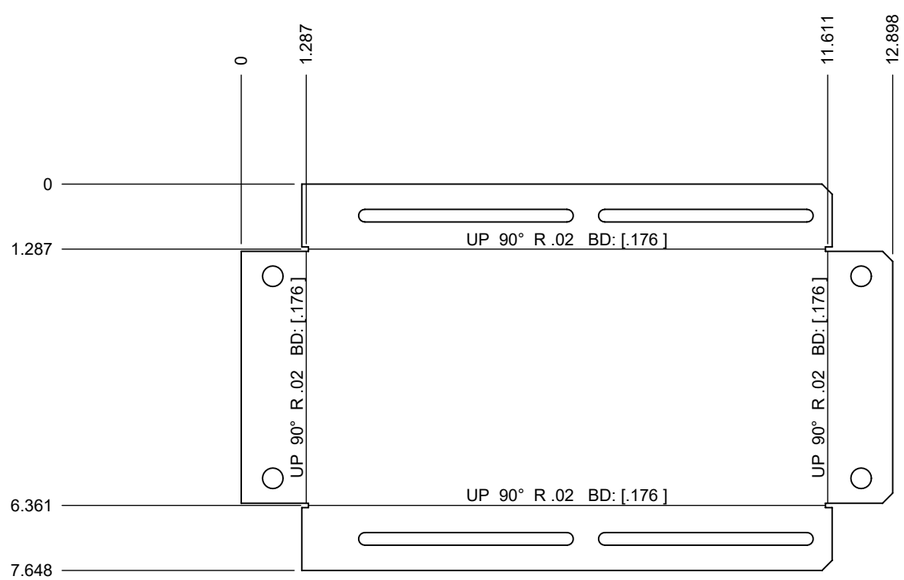

REQUIRED **4** PCS PER ASSEMBLY

MATERIAL 2.72 lbs 0.108 GALVANIZED CRS	DRAWN BY ML	SAVED ON 3/27/2019	Foxfab Power Solutions 2579-188 ST. SURREY, BC V3Z 2A1 (604) 460 - 9310 WWW.FOXFAB.COM
FINISH BARE	BD 0.176" / TOP DIE 0.024"	BOTTOM DIE 16mm	
PROPRIETARY AND CONFIDENTIAL THE INFORMATION CONTAINED IN THIS DRAWING IS THE SOLE PROPERTY OF FOXFAB POWER SOLUTIONS ANY REPRODUCTION IN PART OR AS A WHOLE WITHOUT THE WRITTEN PERMISSION OF FOXFAB POWER SOLUTIONS IS PROHIBITED.	UNLESS OTHERWISE SPECIFIED: DIMENSIONS ARE IN INCHES TOLERANCES: X ± .25 X.X ± .1 X.XX ± .05 X.XXX ± .025 ANGULAR ± 1 INTERPRET DIM AND TOL. PER: **ASME Y14.5**	TITLE: BRACE, SUPPORT, UNISTRUT, 5.25"W	
		THIRD ANGLE: / SIZE **B** / SCALE 1:4	REV
		ITEM NO. / DWG. NO. 250-20156	SHEET 1 OF 1

REVISION				
REV.	ZONE	DESCRIPTION	DATE	DRAWNBY
A		INITIAL RELEASE	8/26/2022	J. LEBLANC
B	B5	ADDED PILOT LIGHT KNOCKOUTS	4/10/2023	J. LEBLANC

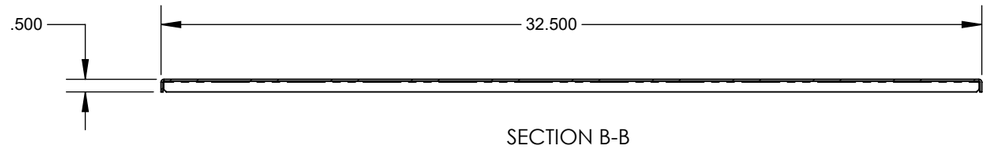

SECTION B-B

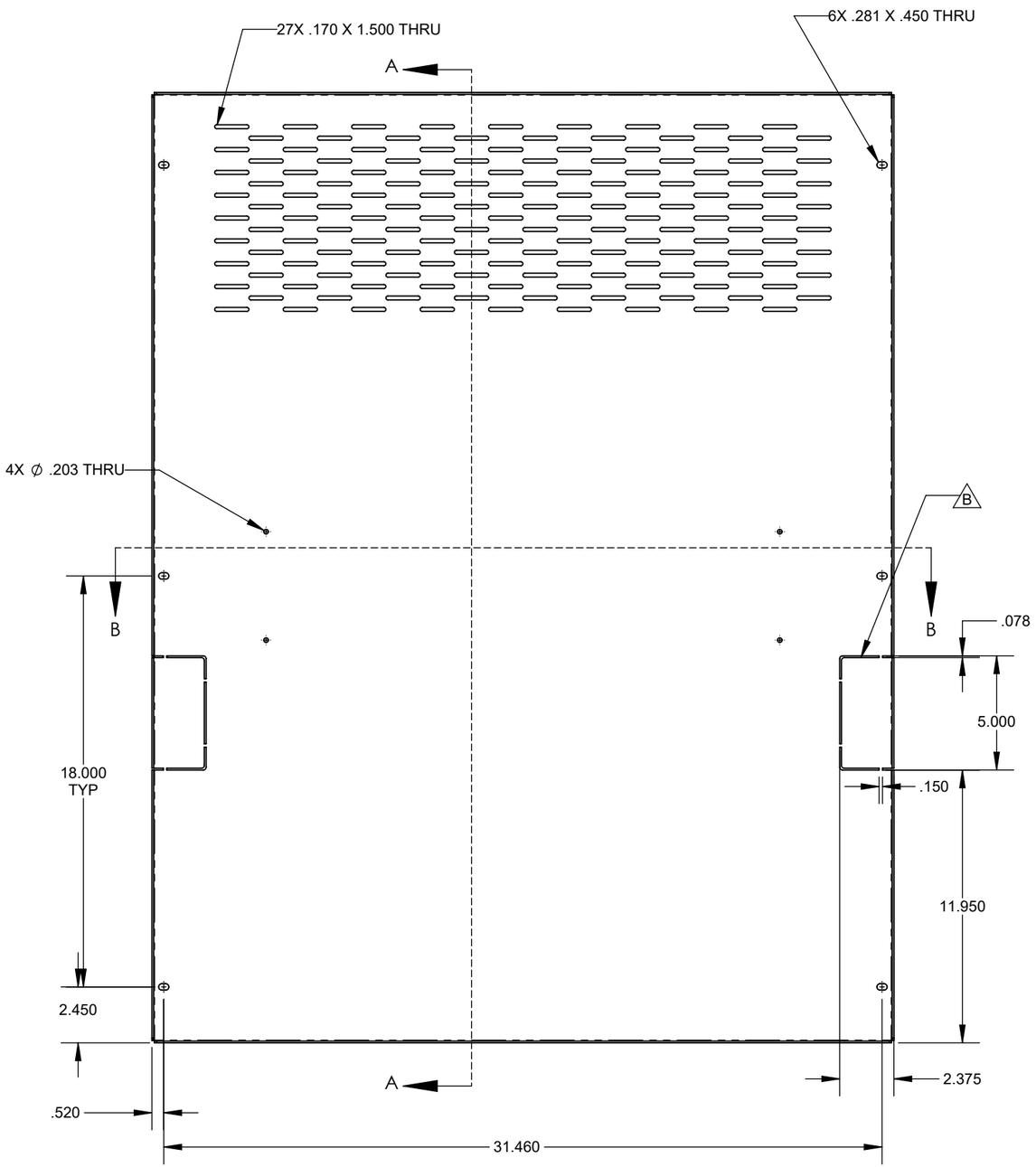

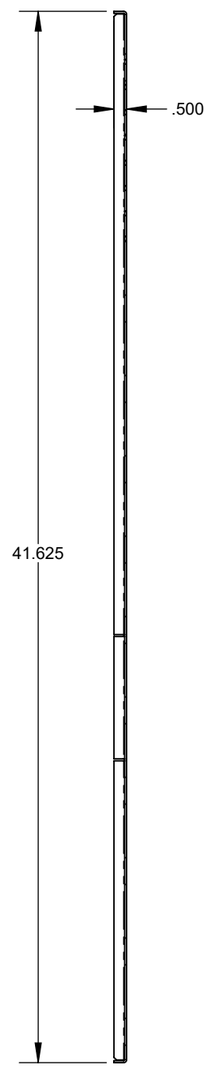

SECTION A-A

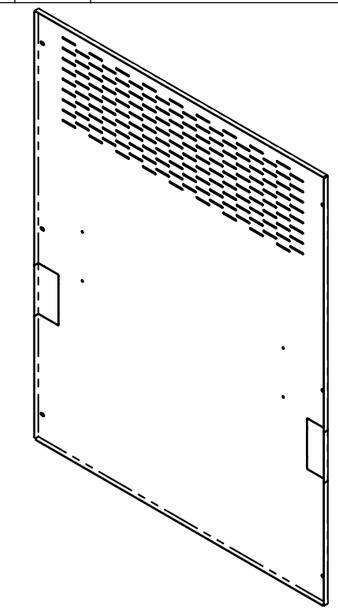

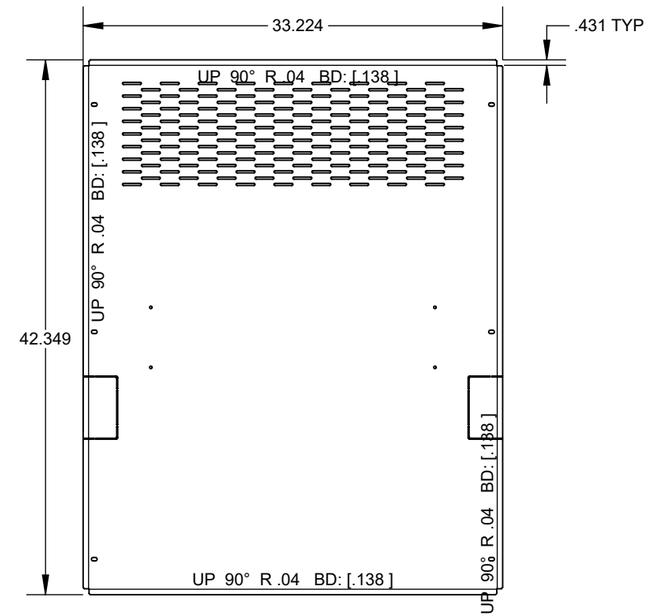

MATERIAL 30.53 lbs 0.0784 GALVANIZED CRS	DRAWN BY JL	SAVED ON 4/10/2023	Foxfab Power Solutions 2579-188 ST. SURREY, BC V3Z 2A1 (604) 460 - 9310 WWW.FOXFAB.COM
FINISH BARE	BD 0.138" / TOP DIE 1mm / BOTTOM DIE 14mm		TITLE: DEADFRONT, TOP, 72x36x30
PROPRIETARY AND CONFIDENTIAL THE INFORMATION CONTAINED IN THIS DRAWING IS THE SOLE PROPERTY OF FOXFAB POWER SOLUTIONS. ANY REPRODUCTION IN PART OR AS A WHOLE WITHOUT THE WRITTEN PERMISSION OF FOXFAB POWER SOLUTIONS IS PROHIBITED.	UNLESS OTHERWISE SPECIFIED: DIMENSIONS ARE IN INCHES TOLERANCES: X ± .25 X.X ± .1 X.XX ± .05 X.XXX ± .025 ANGULAR ± 1 INTERPRET DIM AND TOL. PER: **ASME Y14.5**		THIRD ANGLE: SIZE **B** SCALE 1:6 REV B
			ITEM NO. DWG. NO. 250-40239 SHEET 1 OF 1

REVISION				
REV.	ZONE	DESCRIPTION	DATE	DRAWNBY
A		INITIAL RELEASE	8/26/2022	J. LEBLANC
B		PILOT LIGHT FEATURES ADDED	4/6/2023	J. LEBLANC

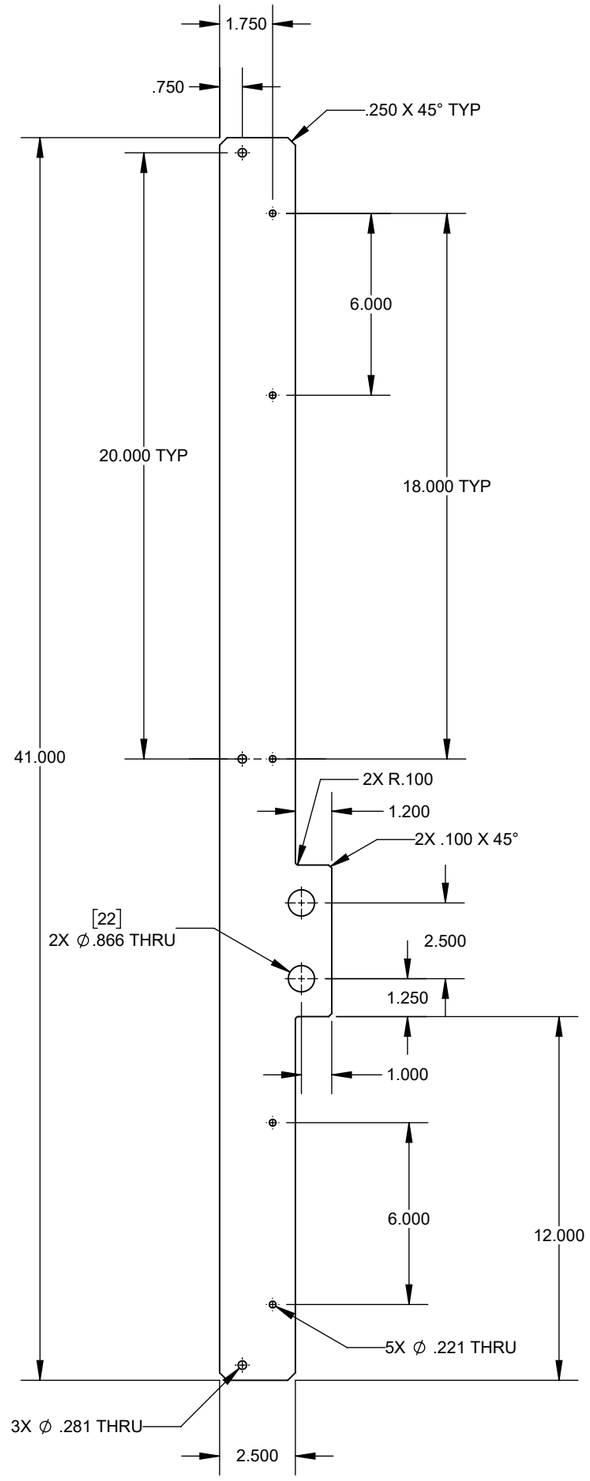

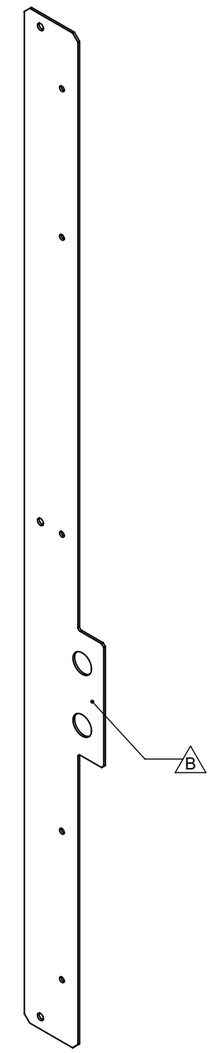

MATERIAL 2.38 lbs 0.079 Galvanized Steel	DRAWN BY JL	SAVED ON 4/6/2023	Foxfab Power Solutions 2579-188 ST. SURREY, BC V3Z 2A1 (604) 460 - 9310 WWW.FOXFAB.COM
FINISH BARE	BD 0.138" / TOP DIE 0.024"	BOTTOM DIE 14mm	TITLE: FRAME, DEADFRONT MOUNT, 41" LENGTH
PROPRIETARY AND CONFIDENTIAL THE INFORMATION CONTAINED IN THIS DRAWING IS THE SOLE PROPERTY OF FOXFAB POWER SOLUTIONS ANY REPRODUCTION IN PART OR AS A WHOLE WITHOUT THE WRITTEN PERMISSION OF FOXFAB POWER SOLUTIONS IS PROHIBITED.	UNLESS OTHERWISE SPECIFIED: DIMENSIONS ARE IN INCHES TOLERANCES: X ± .25 X.X ± .1 X.XX ± .05 X.XXX ± .025 ANGULAR ± 1 INTERPRET DIM AND TOL. PER: **ASME Y14.5**	THIRD ANGLE: SIZE **B** SCALE 1:8	REV B
		ITEM NO. DWG. NO. 250-40240	SHEET 1 OF 1

REVISION				
REV.	ZONE	DESCRIPTION	DATE	DRAWNBY
A		INITIAL RELEASE	8/30/2022	J. LEBLANC
B	C5, C6	NOTCHED BOTTOM FLANGE TO AVOID INTERFERENCE W/ ENCLOSURE	3/3/2023	J. LEBLANC

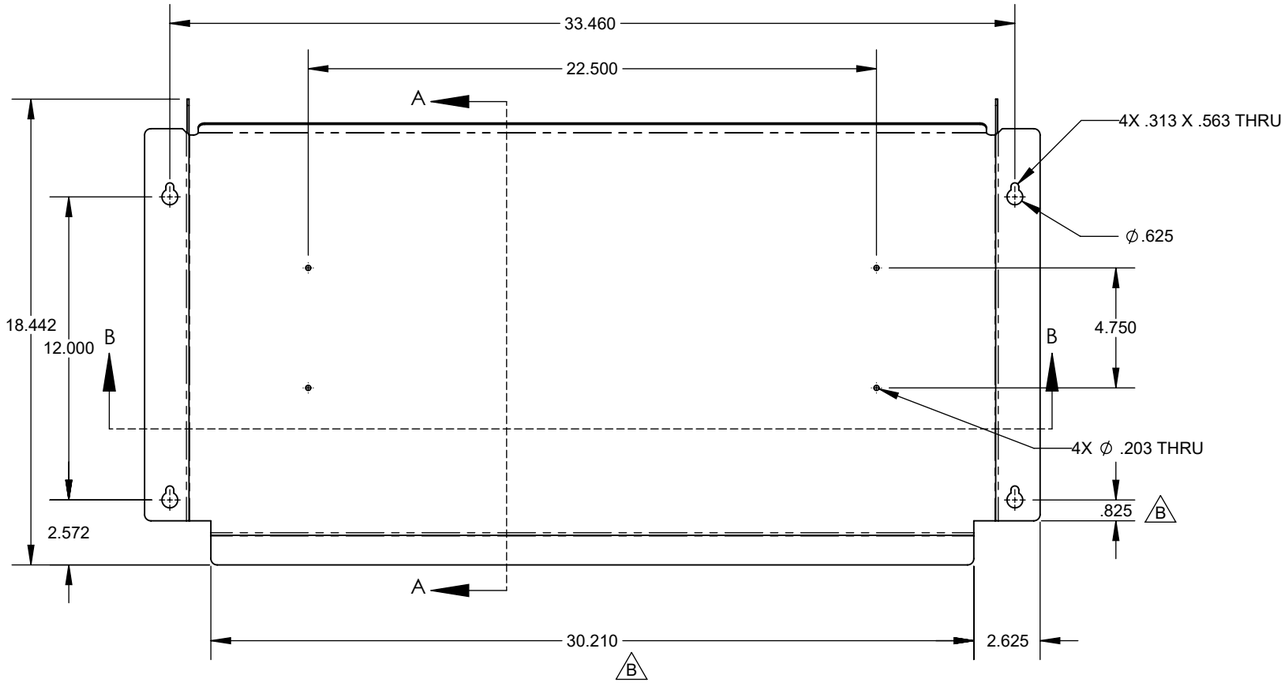

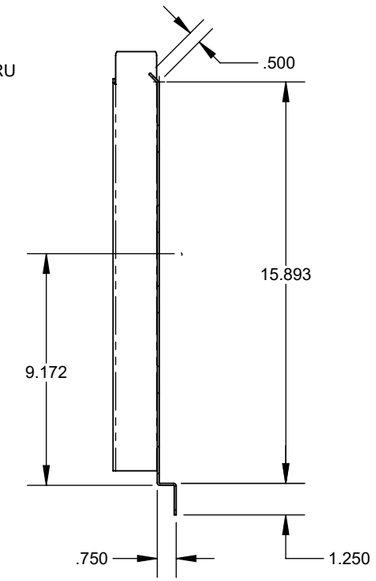

SECTION A-A
SCALE 1 : 6

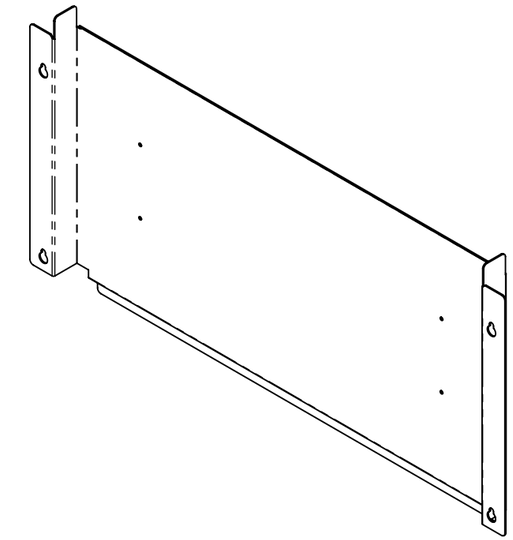

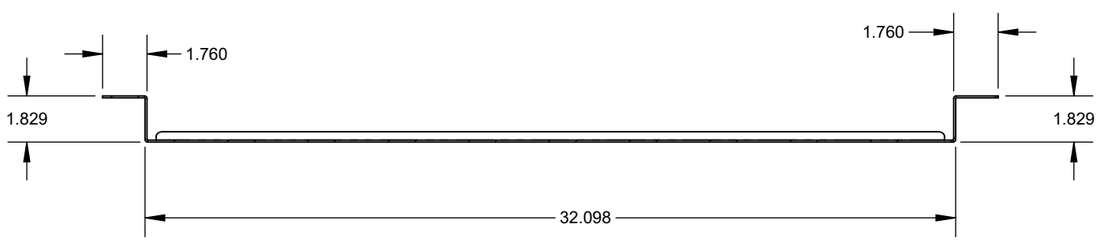

SECTION B-B
SCALE 1 : 6

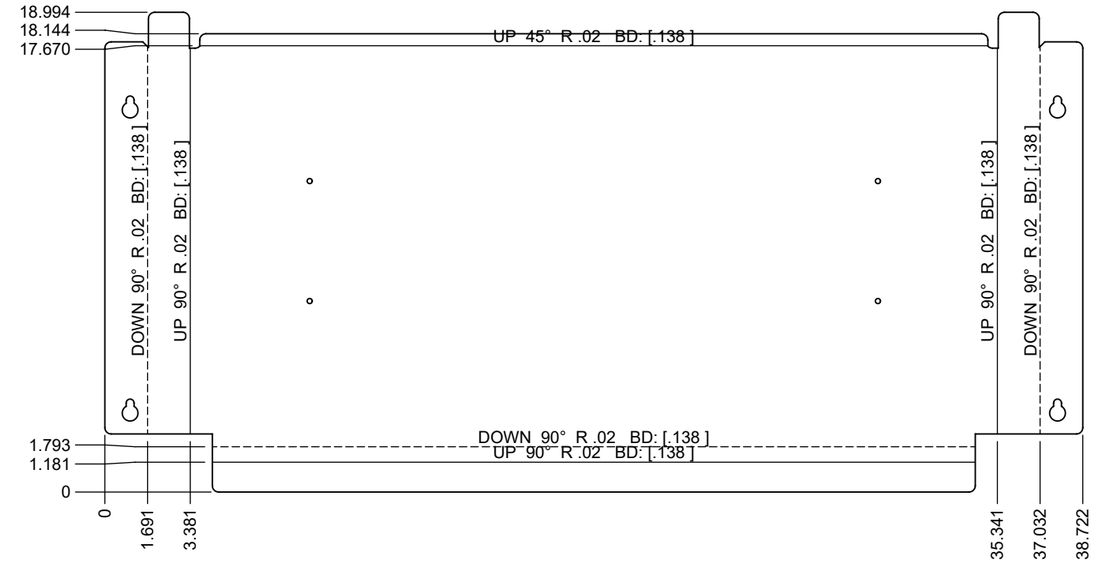

TOP: 1mm
BOTTOM: 14mm
OBD: 0.138" AT 90°
0.051" AT 135°

MATERIAL 15.33 lbs 0.0785 GALVANIZED CRS	DRAWN BY JL	SAVED ON 3/13/2023	Foxfab Power Solutions 2579-188 ST. SURREY, BC V3Z 2A1 (604) 460 - 9310 WWW.FOXFAB.COM
FINISH BARE	BD 0.138" / TOP DIE 1mm / BOTTOM DIE 14mm		TITLE: DEADFRONT, BOTTOM, 72x36x30
PROPRIETARY AND CONFIDENTIAL THE INFORMATION CONTAINED IN THIS DRAWING IS THE SOLE PROPERTY OF FOXFAB POWER SOLUTIONS ANY REPRODUCTION IN PART OR AS A WHOLE WITHOUT THE WRITTEN PERMISSION OF FOXFAB POWER SOLUTIONS IS PROHIBITED.	UNLESS OTHERWISE SPECIFIED: DIMENSIONS ARE IN INCHES TOLERANCES: X ± .25 X.X ± .1 X.XX ± .05 X.XXX ± .025 ANGULAR ± 1 INTERPRET DIM AND TOL. PER: **ASME Y14.5**	THIRD ANGLE:	SIZE **B** / SCALE 1:8 / REV B
		ITEM NO. / DWG. NO. 250-40241	SHEET 1 OF 1

REVISION				
REV.	ZONE	DESCRIPTION	DATE	DRAWNBY
A		INITIAL RELEASE	7/22/2025	L. BADONG

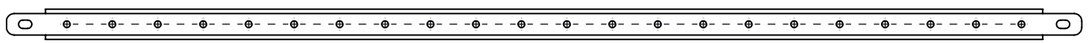

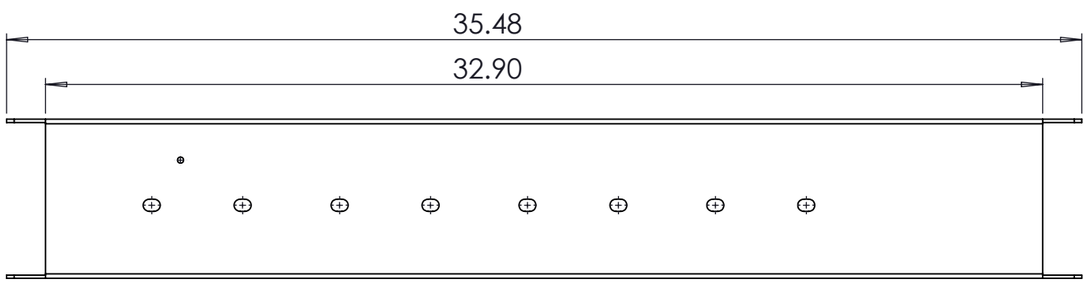

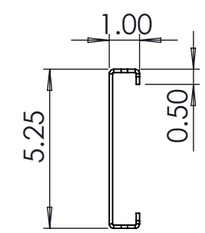

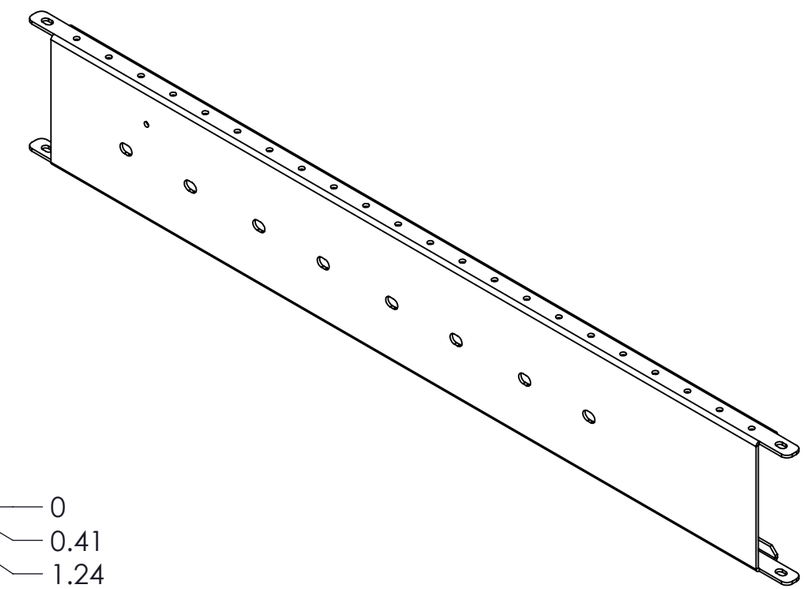

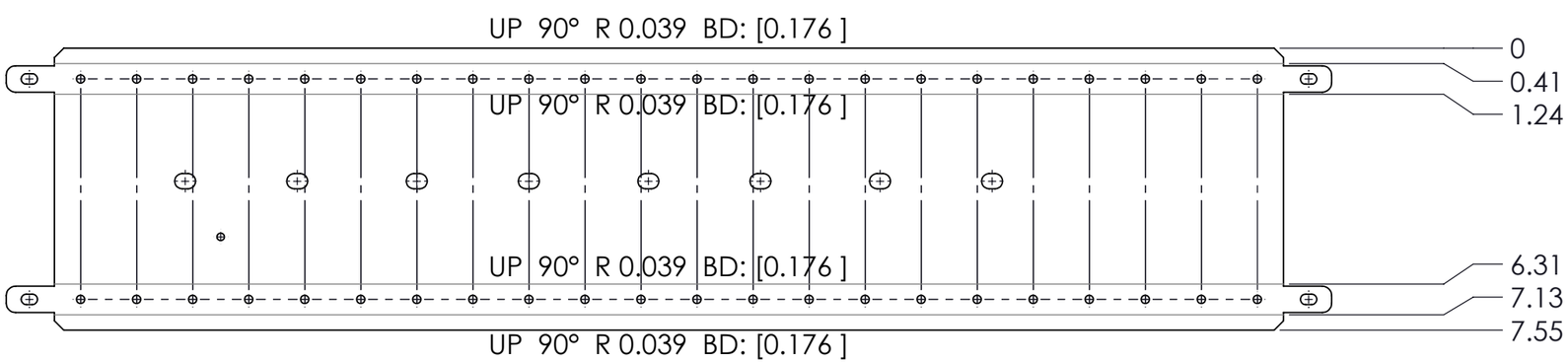

MATERIAL 0.108 GALVANIZED CRS	7.73 lbs	DRAWN BY LB	SAVED ON 7/22/2025
FINISH BARE		BD 0.138" / TOP DIE 1mm	BOTTOM DIE 16mm

PROPRIETARY AND CONFIDENTIAL

THE INFORMATION CONTAINED IN THIS DRAWING IS THE SOLE PROPERTY OF FOXFAB POWER SOLUTIONS ANY REPRODUCTION IN PART OR AS A WHOLE WITHOUT THE WRITTEN PERMISSION OF FOXFAB POWER SOLUTIONS IS PROHIBITED.

UNLESS OTHERWISE SPECIFIED:
DIMENSIONS ARE IN INCHES
TOLERANCES:
X ± .25
X.X ± .1
X.XX ± .05
X.XXX ± .025
ANGULAR ± 1
INTERPRET DIM AND TOL. PER:
ASME Y14.5

Foxfab Power Solutions
2579-188 ST.
SURREY, BC V3Z 2A1
(604) 460 - 9310
WWW.FOXFAB.COM

TITLE:
FRAME, MOUNTING, HORIZONTAL, BUS/STANDOFF MOUNT, 2INSU/PH

THIRD ANGLE: | SIZE **B** | SCALE 1:5 | REV A

ITEM NO. | DWG. NO. 250-90003 | SHEET 1 OF 2

TAG	X LOC	Y LOC	SIZE
A1	-0.67	-0.35	0.28 X 0.44 THRU
A2	-0.67	5.55	0.28 X 0.44 THRU
A3	33.57	-0.35	0.28 X 0.44 THRU
A4	33.57	5.55	0.28 X 0.44 THRU
B1	3.50	2.81	0.41 X 0.56 THRU
B2	6.50	2.81	0.41 X 0.56 THRU
B3	9.70	2.81	0.41 X 0.56 THRU
B4	12.70	2.81	0.41 X 0.56 THRU
B5	15.90	2.81	0.41 X 0.56 THRU
B6	18.90	2.81	0.41 X 0.56 THRU
B7	22.10	2.81	0.41 X 0.56 THRU
B8	25.10	2.81	0.41 X 0.56 THRU

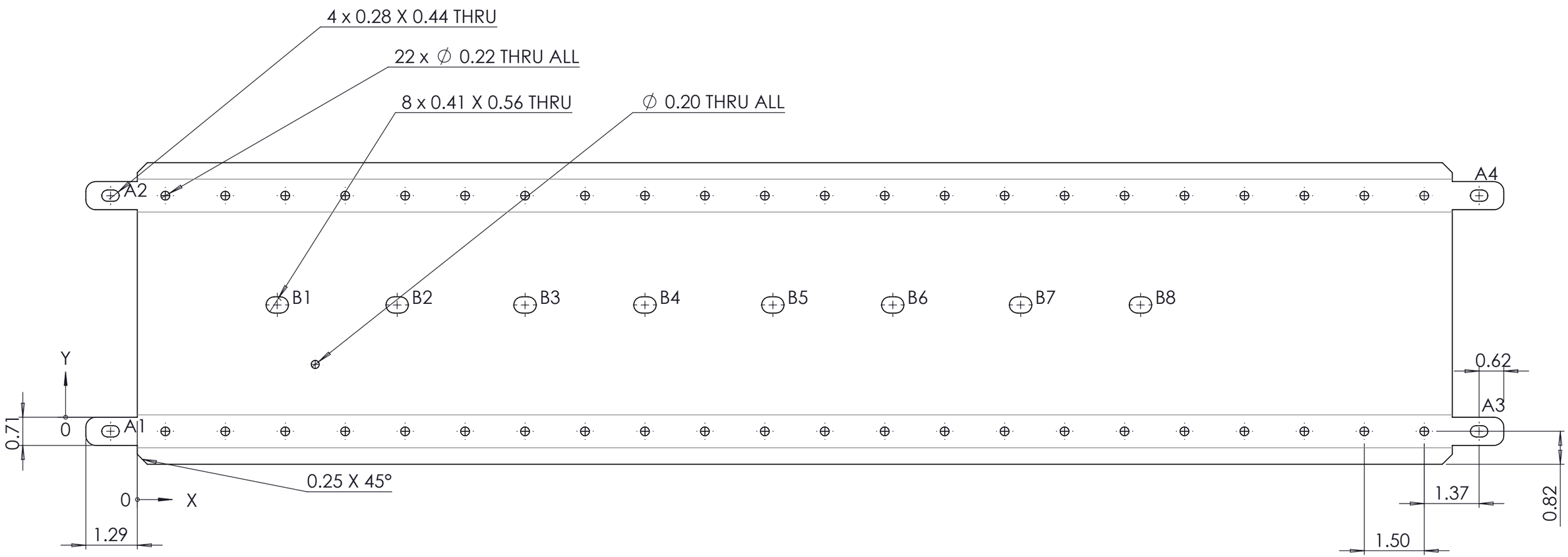

MATERIAL 7.73 lbs
0.108 GALVANIZED CRS

FINISH
BARE

PROPRIETARY AND CONFIDENTIAL

THE INFORMATION CONTAINED IN THIS DRAWING IS THE SOLE PROPERTY OF FOXFAB POWER SOLUTIONS ANY REPRODUCTION IN PART OR AS A WHOLE WITHOUT THE WRITTEN PERMISSION OF FOXFAB POWER SOLUTIONS IS PROHIBITED.

DRAWN BY LB | SAVED ON 7/22/2025

BD 0.138" | TOP DIE 1mm | BOTTOM DIE 16mm

UNLESS OTHERWISE SPECIFIED:
DIMENSIONS ARE IN INCHES
TOLERANCES:
X ± .25
X.X ± .1
X.XX ± .05
X.XXX ± .025
ANGULAR ± 1
INTERPRET DIM AND TOL. PER:
ASME Y14.5

Foxfab Power Solutions
2579-188 ST.
SURREY, BC V3Z 2A1
(604) 460 - 9310
WWW.FOXFAB.COM

TITLE:
FRAME, MOUNTING, HORIZONTAL, BUS/STANDOFF MOUNT, 2INSU/PH

THIRD ANGLE: | SIZE B | SCALE 1:5 | REV A

ITEM NO. | DWG. NO. 250-90003 | SHEET 2 OF 2